9.

10. Covered Processes

10.1 Introduction

This section of the nonresidential compliance manual addresses covered processes which is new for the 2013 Standards (§120.6 and § 140.9)

10.1.1 Organization and Content

This chapter is organized as follows:

- 10.1 Introduction to Covered Processes
- 10.2 Refrigerated Warehouses
- 10.2 Commercial Refrigeration
- 10.3 Enclosed Parking Garages
- 10.4 Process Boilers
- 10.5 Compressed Air Systems
- 10.6 Computer Rooms
- 10.7 Commercial Kitchens
- 10.8 Laboratory Exhaust

10.2 Refrigerated Warehouses

10.2.1 Overview

This chapter of the nonresidential compliance manual addresses refrigerated warehouses. The Standards described in this chapter of the manual address refrigerated space insulation levels, underslab heating requirements in freezers, infiltration barriers, evaporator fan controls, condenser sizing and efficiency requirements, condenser fan controls, and screw compressor variable speed requirements.

A. Organization and Content

This section of the manual focuses on Standards provisions unique to refrigerated warehouses. All buildings regulated under Part 6 of Title 24 must also comply with the General Provisions of the Standards (§100.0 – §100.2, §110.0 – §110.10, §120.0 – §120.9, §130.0 – §130.5), and additions and alterations requirements (§141.1). These topics are generally addressed in Chapter 3 of this manual.

This chapter is organized as follows:

- Section 10.2.1 Overview
- Section 10.2.2 Building Envelope Mandatory requirements
- Section 10.2.3 Mechanical Systems Mandatory Requirements
- Section 10.2.4 Additions and Alterations
- Section 10.2.5 Compliance Documentation

B. Mandatory Measures and Compliance Approaches

The energy efficiency requirements for refrigerated warehouses are all mandatory. There are no prescriptive requirements or performance compliance paths for refrigerated warehouses. Since the provisions are all mandatory, there are no trade-offs allowed between the various requirements. The application must demonstrate compliance with each of the mandatory measures. Exceptions to each mandatory requirement where provided are described in each of the mandatory measure sections below.

C. What's New in the 2013 Standards

With the update to the Standards, there are several important changes to the Refrigerated Warehouses requirements. First, refrigerated warehouses and associated refrigeration equipment are regarded as "covered processes" in Title 24, which are now covered in Section §120.6. Other changes to the Refrigerated Warehouses requirements include:

- Increased freezer roof R-value requirements
- Reduced freezer floor R-value requirements, with a new exception for freezers with underslab slab heat that is provided from the refrigeration system in a manner that produces productive cooling
- Requirements for infiltration barriers on passageways between spaces
- Evaporator fan control requirements for suction groups consisting of a single compressor without variable capacity capability, which were previously exempted
- Allow air-cooled refrigeration condensers on systems that utilize ammonia as the refrigerant
- Minimum efficiency requirements for air-cooled and evaporative condensers
- Application-specific variable-speed requirements for single-compressor suction groups utilizing a screw compressor instead of equipment part-load efficiency requirements
- Refrigeration system acceptance requirements

D. Scope and Application

§120.6(a)

§120.6(a) of the Standards addresses the energy efficiency of refrigerated spaces within buildings, including coolers and freezers, as well as the refrigeration equipment that serves those spaces. Coolers are defined as refrigerated spaces designed to operate at or above 28°F (-2°C) and at or below 55°F (13°C). Freezers are defined as refrigerated spaces designed to operate below 28°F (-2°C). The subsections of §120.6(a) that cover refrigerated space requirements are 1, 2, 3, 6, and 7. The Building Energy Efficiency Standards do not address walk-in coolers and freezers, as these are covered by the Appliance Efficiency Regulations (Title 20). A walk-in is defined as a refrigerated space that is less than 3,000 ft² in floor area. However, refrigeration systems (compressors and condensers that have a common refrigerant supply) that serve a sum total of 3,000 ft² or more <u>are</u> required to comply with the subsections of §120.6(a) that addresses those components specifically (subsections 4, 5, and 7). Also note that refrigeration systems and refrigerated display fixtures in grocery stores are covered in Section 120.6(b) and are described in Chapter 10 of this manual.

Additionally, areas within refrigerated warehouses designed solely for the purpose of quick chilling or quick freezing of products are exempt from the Standards. Quick chilling and freezing spaces are defined as spaces with a design refrigeration evaporator load of greater than 240 Btu/hr-ft² of floor space, which is equivalent to 2 tons per 100 ft² of floor space. A space used for quick chilling or freezing and also used for refrigerated storage must still meet the requirements of §120.6(a).

The intent of the Standards is to regulate storage space, not quick chilling or freezing space, or process equipment. Recognizing that there is often a variety of space types and equipment connected to a particular suction group in a refrigerated warehouse, it is not always possible to identify compressor plant equipment that serves the storage space only. It would be outside the intent of the Standards to apply the compressor plant requirements to an industrial process that is not covered by the Standards simply because a small storage space is also attached to the suction group. Similarly, it would be outside of the intent of the Standards to exclude a compressor plant connected to a suction group serving a large storage space covered by the Standards on the basis of a small process cooler or quick chill space also connected to the same suction group. For the purposes of compliance with the Standards, the compressor plant requirements apply when 80 percent or more of the design refrigeration capacity connected to the suction group is from refrigerated storage space(s). A suction group refers to one or more compressors that are connected to one or more refrigeration loads, whose suction inlets share a common suction header or manifold.

A variety of space types and processes may be served by a compressor plant at different suction pressures. When all of these compressors share a common condensing loop, it is impossible to address only the equipment serving refrigerated storage spaces. For the purposes of compliance with the Standards, the provisions addressing condensers, subsection 4, apply only to new condensers that are part of new refrigeration systems when the total design capacity of all refrigerated storage spaces served by compressors using a common condensing loop is greater than or equal to 80 percent of the total design capacity.

In addition to an all-new refrigerated facility, the Standards cover expansions and modifications to an existing facility and an existing refrigeration plant. The Standards

do not require that all existing equipment must all comply when a refrigerated warehouse is expanded or modified using existing refrigeration equipment. Exceptions are stated in the individual equipment requirements and an explanation of applicability to Additions and Alterations is included in Section 10.2.4.

E. Ventilation

Section §120.1(a)1 of the Standards concerning ventilation requirements includes an exception for "Refrigerated warehouses and other spaces or buildings that are not normally used for human occupancy and work". The definition of refrigerated warehouses covers all refrigerated spaces at or below 55°F (13°C) which will in some instances include spaces with occupancy levels or durations, effect of stored product on space conditions, or other factors which may require ventilation for one or more reasons. Accordingly, while the Standards do not require ventilation for refrigerated warehouses, it is acknowledged that ventilation may be needed in some instances and is left to the determination of the owner and project engineer.

Example 10-1

Question

A space that is part of a refrigerated facility is used solely to freeze meat products and not for storage. The design evaporator load is 310 Btu/hr-ft² at the applied conditions. Does the space have to comply with the space requirements (subsections 1, 2, 3, 6, and 7) of the Standards?

Answer

No. The design evaporator capacity is more than 240 Btu/hr-ft² and the space is not used for long-term storage. This space meets the definition of a quick chilling space. Therefore, the space does not have to comply with the space requirements (subsections 1, 2, 3, 6, and 7) of the Standards.

Example 10-2

Question

A refrigerated warehouse space is used to cool and store melons received from the field. After the product temperature is pulled down, the product is stored in the same space for a few days until being shipped or sent to packaging. The design evaporator capacity is 300 Btu/hr-ft^2 at the applied conditions. Does the space have to comply with the space requirements (subsections 1, 2, 3, 6, and 7) of the Standards?

Answer

Yes. While the design evaporator capacity is greater than 240 Btu/hr-ft² and the space is used for product pulldown for part of the time, the space is also used for holding product after it has been cooled. Accordingly, the space has to comply with the space requirements (subsections 1, 2, 3, 6, and 7) of the Standards.

Comment: The Standard does not define a specific time limit that a quick chill (which for clarity includes quick "freeze") space could operate as a holding space (i.e. at full speed and thus full fan power). The typical high fan power density in a quick chill space, particularly at full speed after the high cooling load has been removed, is very inefficient. Thus a reasonable expectation for a dedicated quick chill space is to allow no more time (at full speed) than is appropriate to remove the product in a normal business cycle of loading, cooling/freezing, and removing product once it has been reduced to temperature. If product is to be held any longer, variable speed is required to reduce fan power. Variable speed requirements are discussed in 8.3.2B

Example 10-3

Question

A new refrigeration system serves both storage and quick chilling space. The design refrigeration capacity of the storage space is 500 tons. The design capacity of the quick chilling space is 50 tons. Is the refrigeration system required to meet the requirements of the Standards?

Answer

Yes. Since more than 80 percent of the design capacity of the system is serving storage space, the refrigeration system requirements apply.

Example 10-4

Question

A new refrigerated warehouse is being constructed, which will include a 1,500 ft² cooler space, and a 2,500 ft² freezer space. Both the cooler and freezer are served by a common refrigeration system. Is the refrigeration system required to comply with the Standard?

Answer

Since the cooler and freezer each have less than 3,000 ft² of floor area, they are not required to comply with the Standard. However, they are considered walk-ins and must comply with the requirements of the Appliance Efficiency Regulations (Title 20).

Since the suction group serves a sum total 4,000 ft² of refrigerated floor area, the compressors and condenser are required to comply with subsections 4, 5, and 7 of Section §120.6(a), which specifically address refrigeration system requirements.

10.2.2 Building Envelope

§120.6(a) subsections 1, 2, and 6 of the Standards address the mandatory requirements for refrigerated space insulation, underslab heating, and infiltration barriers.

A. Envelope Insulation

§120.6(a)1

Wall and Roof Insulation

Manufacturers must certify that insulating materials comply with *California Quality Standards for Insulating Material* (C.C.R., Title 24, Part 12, Chapters 12-13), which ensure that insulation sold or installed in the state performs according to stated R-values and meets minimum quality, health, and safety standards. These Standards state that all thermal performance tests shall be conducted on materials which have been conditioned at 73.4° ± 3.6°F and a relative humidity of 50 ± 5 percent for 24 hours immediately preceding the tests. The average testing temperature shall be 75° ± 2°F with at least a 40°F temperature difference. Builders may not install insulating materials unless the product has been certified by the Department of Consumer Affairs, Bureau of Home Furnishing and Thermal Insulation. Builders and enforcement agencies shall use the Department of Consumer Affairs Directory of Certified Insulation Material to verify the certification of the insulating material.

Refrigerated spaces with 3,000 ft² of floor area or more shall meet the minimum R-Value requirements shown in *Table 10-1*.

Table 10-1 – Refrigerated Warehouse Insulation

SPACE	SURFACE	MINIMUM R-VALUE (°F·hr·ft²/Btu)
Freezers	Roof/Ceiling	R-40
	Wall	R-36
	Floor	R-35
	Floor with all heating from productive refrigeration capacity	R-20
Coolers	Roof/Ceiling	R-28
	Wall	R-28

The R-values shown in Table 10-1 apply to all surfaces enclosing a refrigerated space, including refrigerated spaces adjoining conditioned spaces, other refrigerated spaces, unconditioned spaces and the outdoors. If a partition is used between refrigerated spaces that are designed to always operate at the same temperature, the requirements do not apply. The R-values are the nominal insulation R-values and do not include other building materials or internal or external "film" resistances.

Example 10-5

Question

A refrigerated warehouse designed to store produce at 45°F (7°C) is constructed from tilt-up concrete walls and concrete roof sections. What is the minimum R-value of the wall and roof insulation?

Answer

Since the storage temperature is greater than 28°F (-2°C), the space is defined as a cooler. The minimum R-value of the wall and roof insulation according to *Table 10-1* is R-28.

Example 10-6

Question

A refrigerated warehouse is constructed of a wall section consisting of 4 inches of concrete, 6 inches of medium density (2 lb/ft³) foam insulation and another 4 inches of concrete. The nominal R-value of the foam insulation is R-5.8 per inch. What is the R-value of this wall section for code compliance purposes?

Answer

The insulating value of the concrete walls is ignored. The R-value of this wall section for code compliance purposes is based on the 6 inches of foam insulation at R-5.8 per inch, or R-34.8.

Example 10-7

Question

A 35°F cooler space is adjacent to a -10°F freezer space. What is the minimum required insulation R-value of the shared wall between the cooler and freezer spaces?

Answer

The minimum insulation R-value requirements should be interpreted to apply to all surfaces enclosing the refrigerated space at the subject temperature. Therefore, since the freezer space walls must be insulated to the minimum R-value requirements shown in Table 8 1, the R-value of the shared wall insulation must be at least R-36. The minimum insulation R-value requirement of the other three cooler walls is R-28. The figure below illustrates this example.

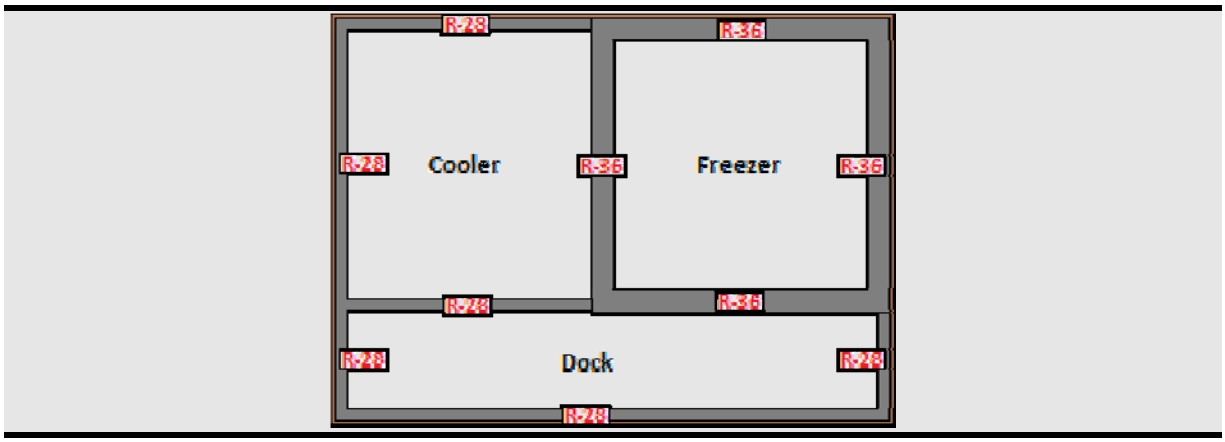

B. Freezer Floor Insulation

Freezer spaces with 3,000 ft² of floor area or more shall meet the minimum floor insulation R-value requirements shown in Table 10-1. The requirement is a minimum R-value of R-35, with an exception if the underslab heating system increases productive refrigeration capacity, in which case the minimum R-value is R-20.

The predominant insulating material used in freezer floors is extruded polystyrene, which is commonly available in 2”-thick increments, but can optionally be purchased in 1”-thick increments as well. Extruded polystyrene has an R-value of R-5 per inch at standardized rating conditions, and extruded polystyrene panels can be stacked, so the freezer floor can be constructed with R-value multiples of 5 (R-30, R-35, R-40).

A lower floor insulation R-value of R-20 is allowed if all of the underslab heat is provided by an underslab heating system that increases productive refrigeration capacity. An example of an underslab heating system utilizing heat from a refrigerant liquid subcooler is shown in *Figure **10-1***.

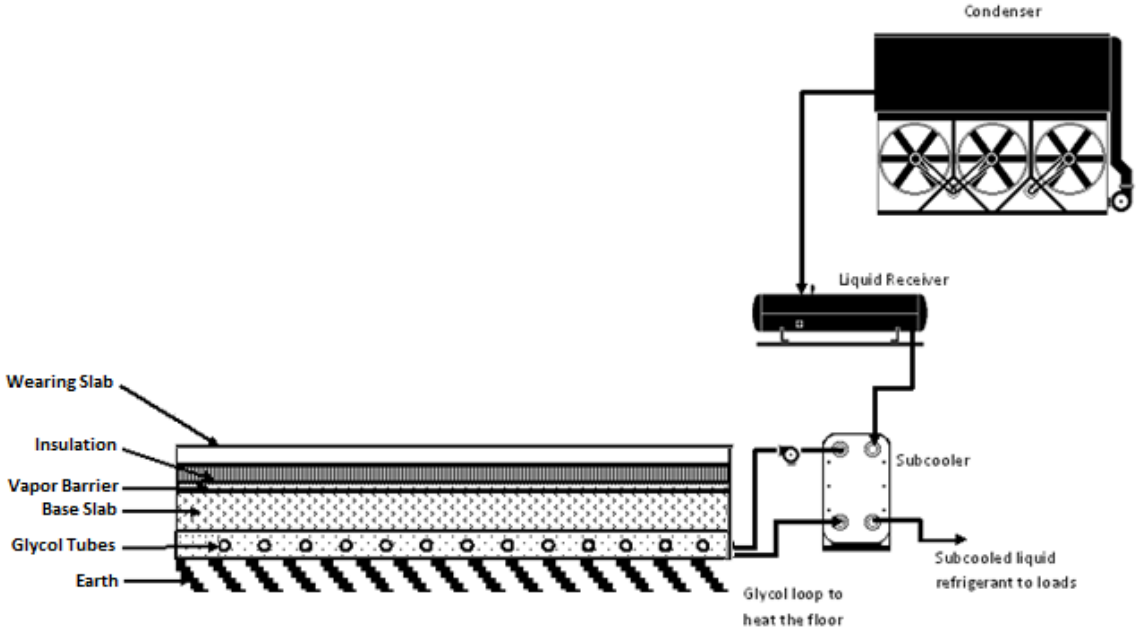

Figure 10-1 – Underslab Heating System that Utilizes Refrigerant Subcooling

The lower R-value requirement when this type of underslab heating system is used is justified because the increased underslab heat gain to the space due to reduced insulation is offset by the heat extracted from the refrigerant liquid—which is a direct reduction in compressor load. The minimum requirement of R-20 does not mean that R-20 is the optimum or appropriate insulation choice in all installations. Rather, R-20 is a cost-effective trade-off when underfloor heating is obtained via productive refrigeration. Higher insulation levels combined with heating from productive refrigeration would further improve efficiency.

B. Underslab Heating Controls

§120.6(a)2

Underslab heating systems should be used under freezer spaces to prevent soil freezing and expansion. The underslab heating element might be electric resistance, forced air, or heated fluid; however, underslab heating systems utilizing electric resistance heating elements are not permitted unless they are thermostatically-controlled and disabled during the summer on-peak period. The summer on-peak period is defined by the supplying electric utility, but generally occurs from approximately 12 PM to 6 PM weekdays during the months of May through October. The control system used to control any electric resistance underslab heating elements must automatically turn the elements off during this on-peak period. The control system used to control electric resistance underslab heating elements must be shown on the building drawings, and the control sequence demonstrating compliance with this requirement must be documented on the drawings and in the control system specifications.

C. Infiltration Barriers

120.6(a)6

Passageways between freezers and higher-temperature spaces, and passageways between coolers and non-refrigerated spaces, shall have an infiltration barrier such as:

- Strip curtains, or
- An automatically closing door, or
- Air curtain

Examples of each are shown below.

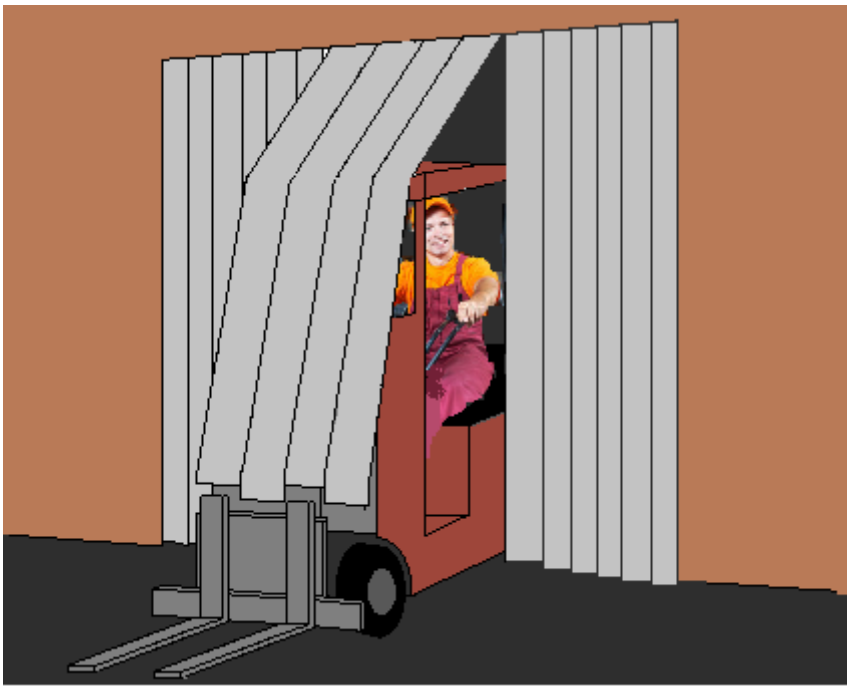

Figure 10-2 – Strip Curtains

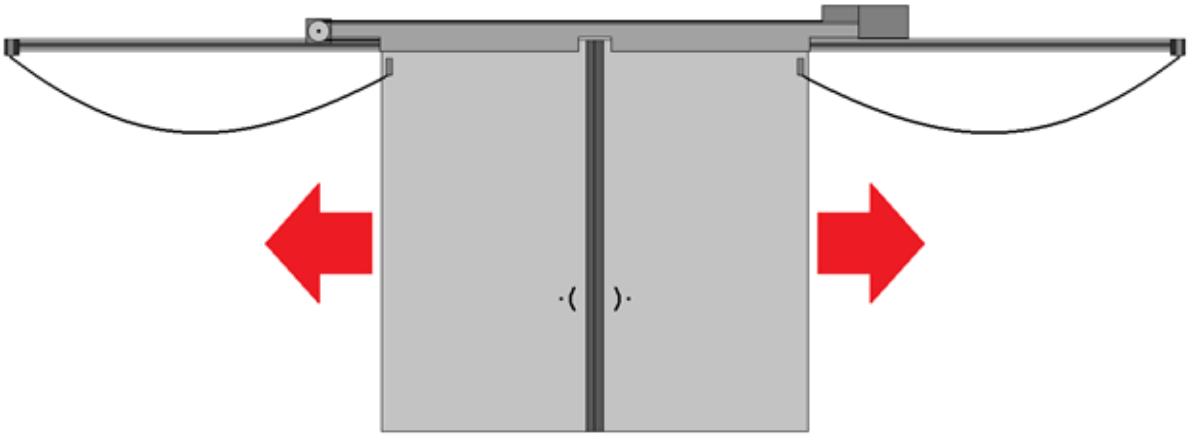

Figure 10-3 – Bi-parting automatic door

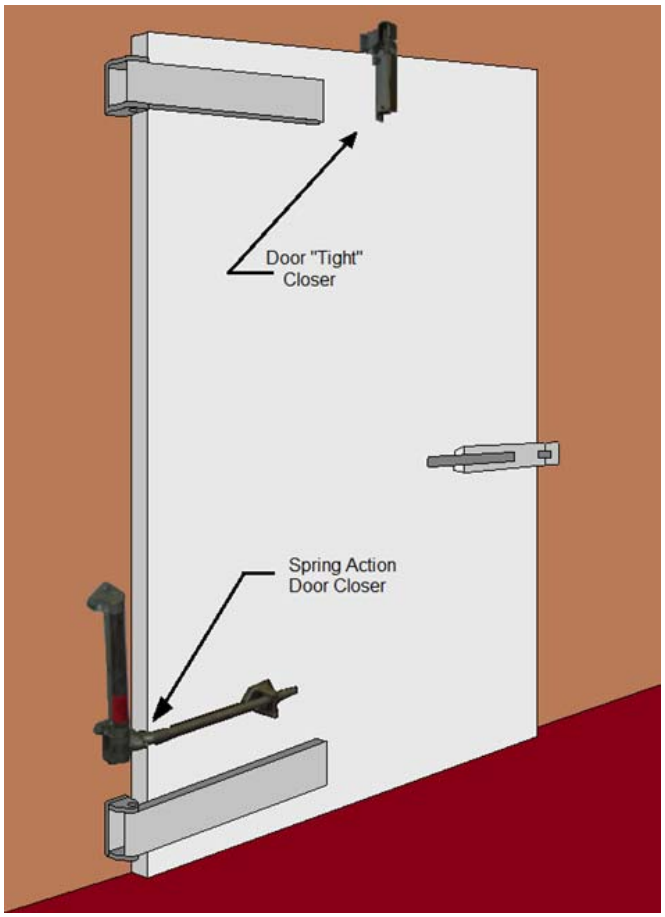

Figure 10-4 – Hinged door with spring-action door closer and door "tight" closer

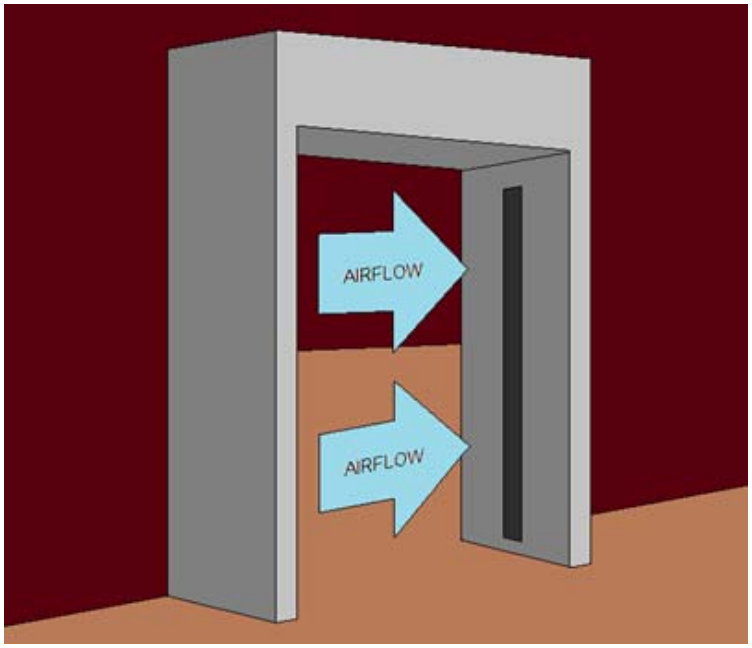

Figure 10-5 – Air Curtain

The passageways may be for, but are not limited to, people, forklifts, pallet lifts, hand-trucks, or conveyor belts.

Strip curtains are commercial flexible plastic strips made for refrigerated openings with material type, weight and overlap design, designed for the size of the passageway opening and the temperatures of the subject spaces.

An automatically closing door is a door that fully closes under its own power. Examples include:

- Single acting or double acting hinge-mounted doors with a spring assembly or cam-type gravity hinges.
- Powered single-sliding, bi-parting or rollup doors which open based on a pull-cord, proximity or similar sensors, or by operator signal and close automatically through similar actions or after a period of time sufficient to allow passageway transit.

An air curtain is a commercial fan powered assembly intended to reduce air infiltration and designed by its manufacturer for use on refrigerated warehouse passageways, and for use on the opening size and the temperatures for which it is applied.

There are two exceptions to the requirements for infiltration barriers:

1. Openings with less than 16 square feet of opening area, such as small passageways for conveyor belts
2. Loading dock doorways for trailers

Example 10-8

Question

A refrigerated warehouse includes a freezer, cooler, a refrigerated dock, and a conditioned office, as shown in the following figure. Where are infiltration barriers required?

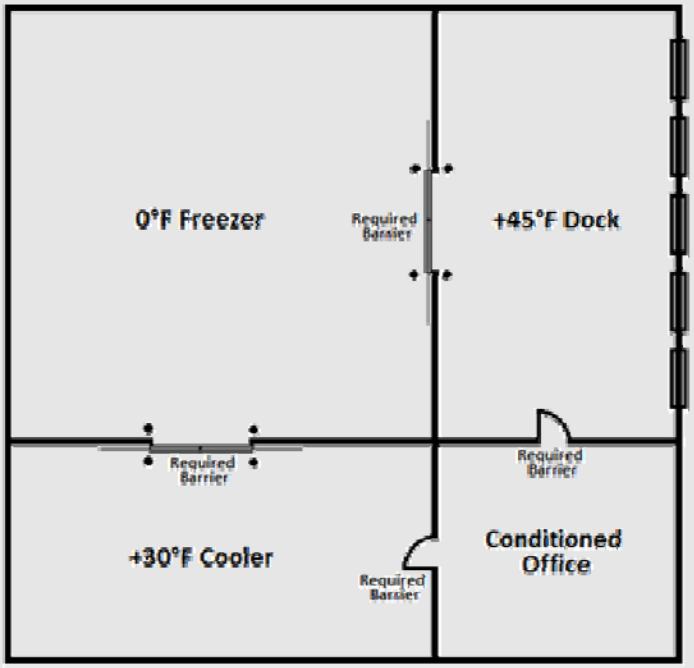

Answer

Infiltration barrier are required between all spaces including the hinge-mounted doors between the dock and the office. The dock doors do not require infiltration barriers.

Example 10-9

Question

A refrigerated warehouse is being constructed for a flower distribution company. Strip curtains cannot be used on the doors because the strips will damage the flowers when the pallet jack passes through. Is the warehouse still required to have infiltration barriers?

Answer

Yes, the warehouse is required to have infiltration barriers. If strip curtains cannot be used, the designer may choose another method, such as double-acting hinged doors, sliding or rollup doors with automatic door closers.

D. Acceptance Requirements

§120.6(a)7

The Standards include acceptance test requirements for electric resistance underslab heating systems in accordance with NA7.10.1. The test requirements are described in Chapter 10 and the Reference Nonresidential Appendix NA7.10. The test requirements are described briefly in the following paragraph.

E. Electric Resistance Underslab Heating System

NA7.10.1

The acceptance requirements include functional tests that are to be performed to verify that the electric resistance underslab heating system automatically turns off during a test on-peak period.

10.2.4 Mechanical Systems

A. Overview

This section addresses mandatory requirements for mechanical systems serving refrigerated spaces. Mechanical system components addressed by the Standards include evaporators (air units), compressors, condensers, and refrigeration system controls. The requirements for each of these components are described in the following sections. The requirements apply to all system and component types with the exception of the specific exclusions noted in §120.6(a). The following figures identify some of the common system and component configurations that fall under §120.6(a).

Figure 10-6 is a schematic of a single stage system with direct expansion (DX) evaporator coils. Figure 10-7 identifies a single stage system with flooded evaporator coils, while Figure 10-7 shows a single stage system with pump recirculated evaporators. Figure 10-9 is a schematic of a typical two-stage system with an intercooler between the compressor stages. Figure 10-10 is a single-stage system with a water-cooled condenser and fluid cooler.

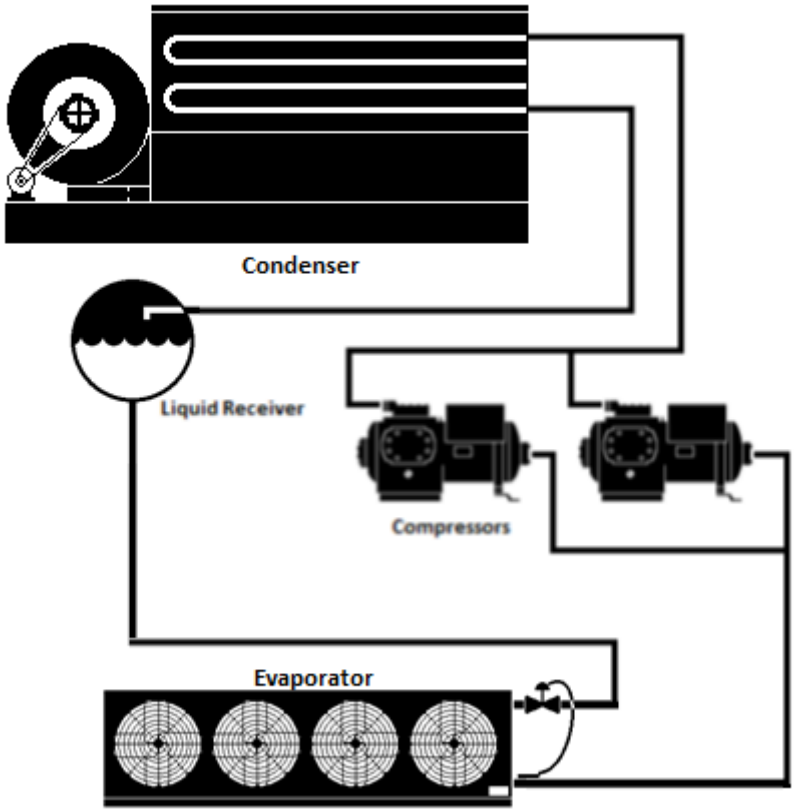

Figure 10-6 – Single Stage System with DX Evaporator Coil

This section addresses mandatory requirements for mechanical systems serving refrigerated spaces. Mechanical system components addressed by the Standards include evaporators (air units), compressors, condensers, and refrigeration system controls. The requirements for each of these components are described in the following sections. The requirements apply to all system and component types with the exception of the specific exclusions noted in §120.6(a). The following figures identify some of the common system and component configurations that fall under §120.6(a).

Figure 10-6 is a schematic of a single stage system with direct expansion (DX) evaporator coils. Figure 10-7 identifies a single stage system with flooded evaporator coils, while Figure 10-8 shows a single stage system with pump recirculated evaporators. Figure 10-9 is a schematic of a typical two-stage system with an intercooler between the compressor stages. Figure 10-10 is a single-stage system with a water-cooled condenser and fluid cooler.

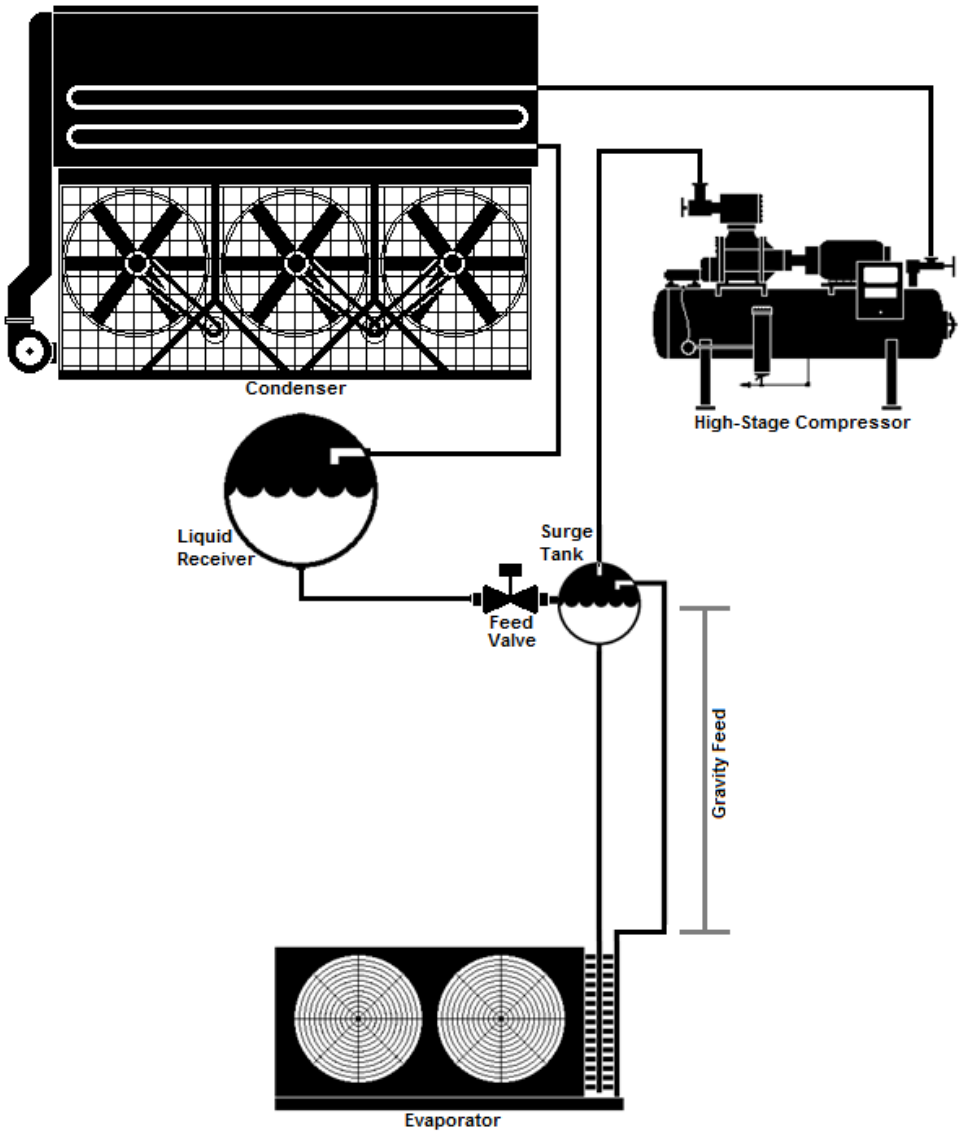

Figure 10-7 – Single Stage System with Flooded Evaporator Coil

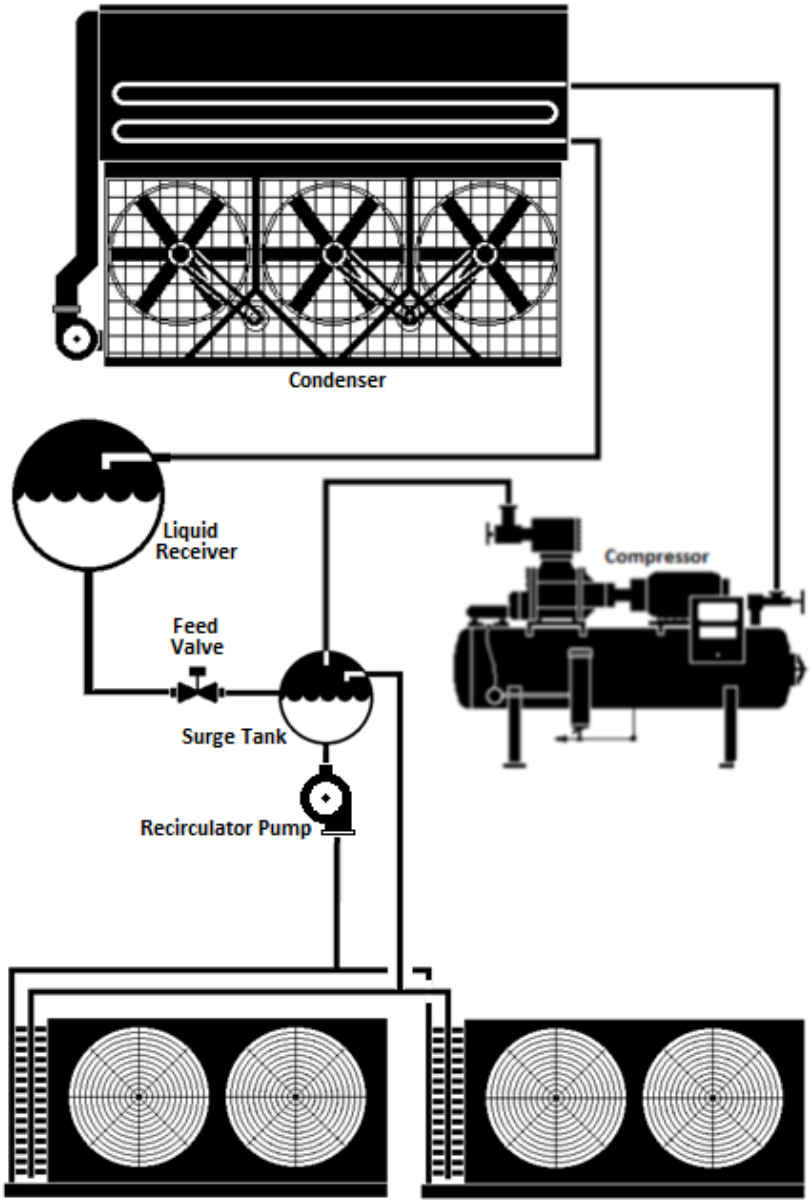

Figure 10-8 – Single Stage System with Pump Recirculated Evaporator Coils

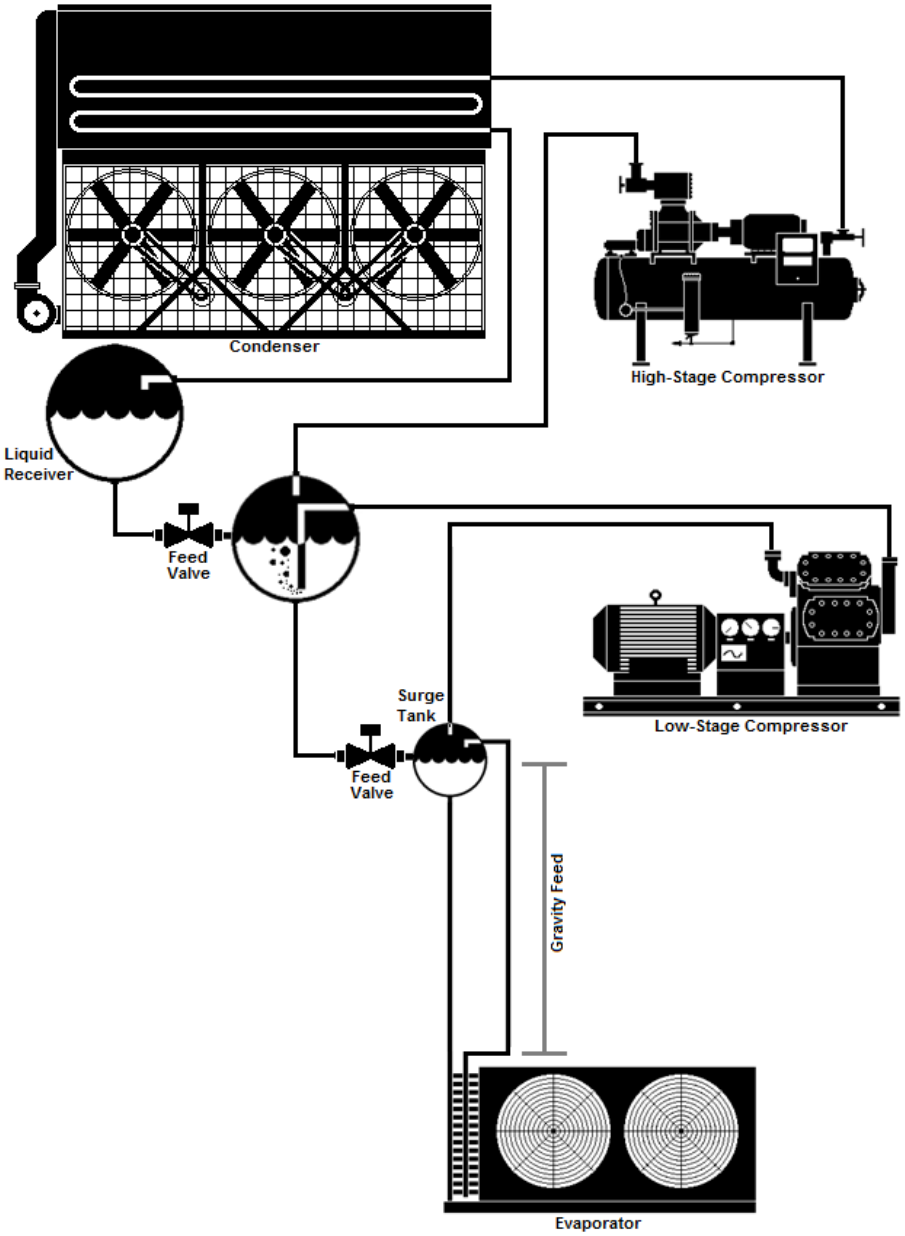

Figure 10-9 – Two-Stage System with Flooded Evaporator Coil

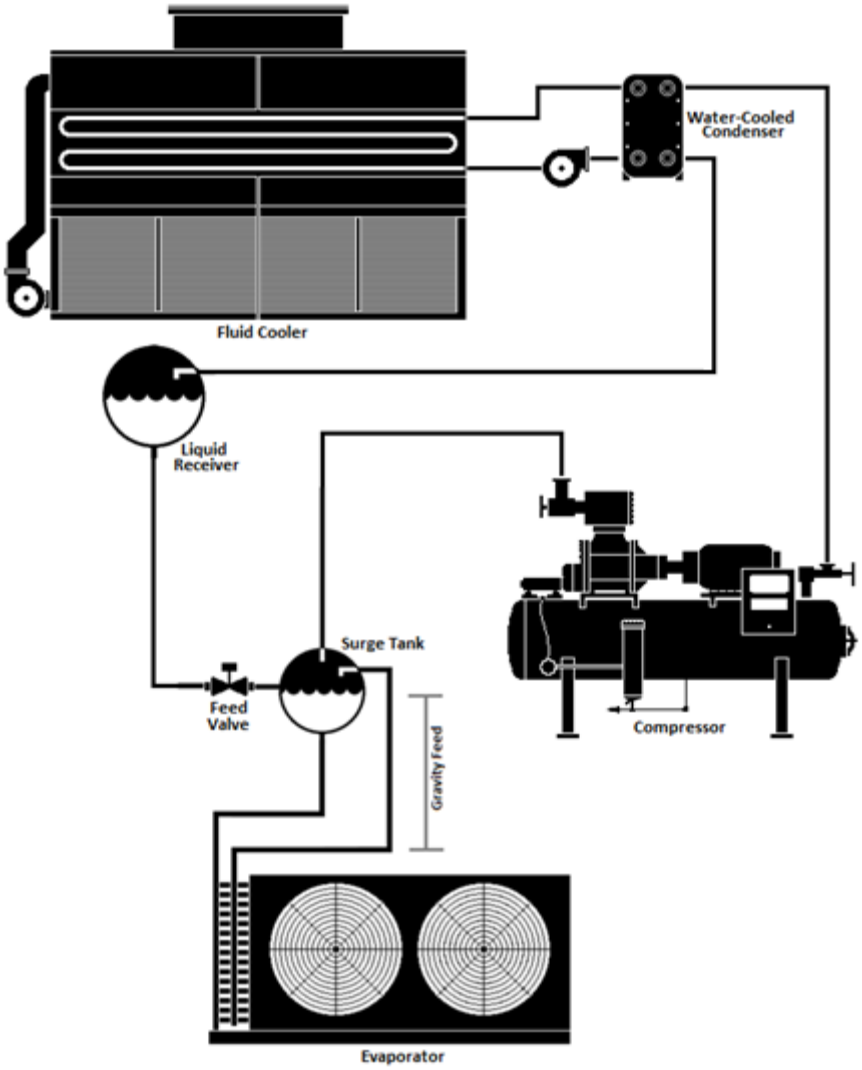

Figure 10-10 – Single System with Water-Cooled Condenser Served by Fluid Cooler

B. Evaporators

§120.6(a)3

New fan-powered evaporators used in coolers and freezers must meet the fan motor type, efficiency, and fan control requirements outlined in the Standards.

A. Allowed Fan Motor Types

Single phase fan motors less than 1 horsepower and less than 460 Volts must be either electronically-commutated (EC, also known as Brushless DC) or must have an efficiency of 70 percent or more when rated in accordance with NEMA Standard MG 1-2006 at full load rating conditions. This requirement is designed to reduce fan power in small evaporator fans.

B. Fan Motor Control

The speed of all evaporator fans served by either a suction group with multiple compressors or by a single compressor with variable capacity capability must be

controlled in response to space temperature or humidity using a continuously variable speed control method. Two-speed control of evaporator fans is not an acceptable control method.

The fan speed is controlled in response to space temperature or humidity. Fan speed should increase proportionally when the space temperature is above setpoint and decrease when the space temperature is at or below setpoint, with refrigerant supply and pressure being maintained in the evaporator cooling coil. Fan speed is equivalent to air volume being circulated, resulting in direct control of cooling capacity, analogous to “variable air volume” cooling in commercial buildings. The control logic requires design and tuning to provide “variable” capacity operation.

The use of humidity as the control variable for speed control is very limited in practice but is included in the Standards to accommodate special strategies for humidity-sensitive perishable product. Control logic is these applications often will employ humidity in conjunction with temperature.

The intent of this requirement is to take advantage of the “third-power” fan affinity law, which states that the percentage of required fan motor power is approximately equal to the cube of the percentage of fan speed, while the airflow is linearly proportional to the fan speed. For example, a fan running at 80 percent speed requires approximately 51 percent ($80\%^3 = 51\%$) power while providing approximately 80 percent airflow. Actual power is somewhat higher due to inefficiencies and drive losses. Figure 10-11 shows the relationship between fan speed and both required fan power and approximate airflow.

There is no requirement in the Standards for the minimum speed setting (i.e. how low the fan speed must go at minimum load). Variable speed control of evaporator fans has commonly used minimum speeds of 80 percent or lower on direct expansion coils and 70 percent or lower on flooded or recirculated coils. The allowable minimum fan speed setting is to be determined by the refrigeration system designer. The fan speed may be adjusted or controlled to maintain adequate air circulation in order to ensure product integrity and quality.

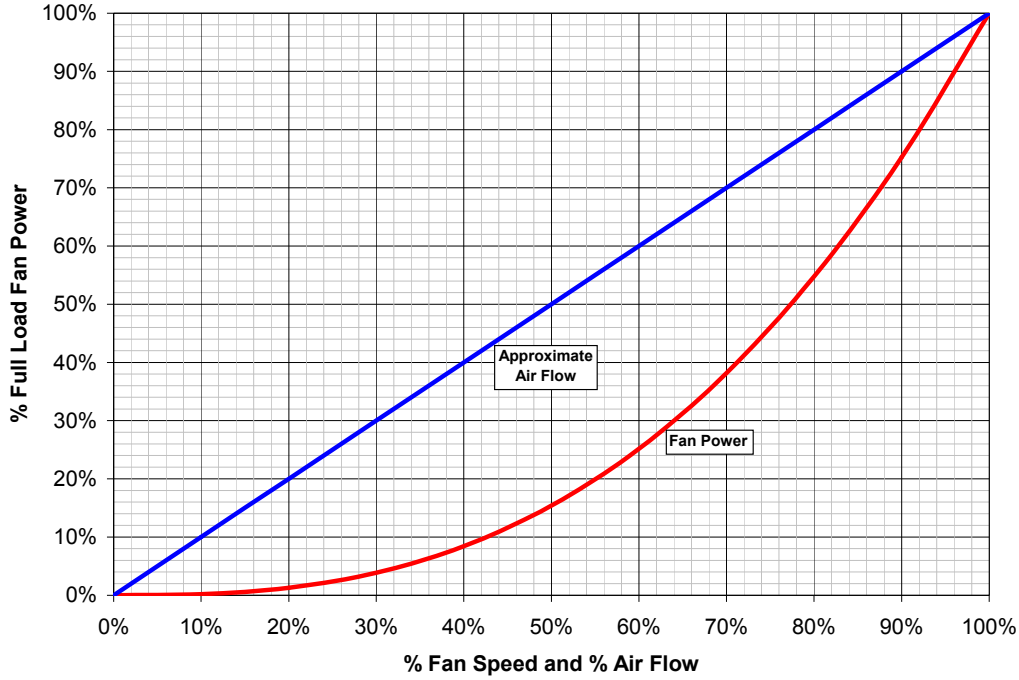

Figure 10-11– Relationship between Fan Speed and Required Power

Correct fan speed control requires the associated system suction pressure to be controlled such that evaporator capacity is sufficient to meet space loads. If the evaporator suction pressure is too high relative to the desired room temperature, the evaporator fans will run at excessively high speed and energy savings will not be realized. If floating suction pressure automation is used to optimize the suction pressure setpoint, suction pressure should only be allowed to float up after fan speeds are at minimum and should be controlled to float back down prior to increasing fan speeds.

The Standards have three exceptions to the evaporator variable speed requirement:

1. In case of a replacement, addition or alteration of existing evaporators with no variable speed control, the variable speed control of the evaporators is mandatory only if the replacement, addition or alteration is done for all the evaporators in an existing space. *[Exception 1 to §120.6 (a) 3B]*
2. A Controlled Atmosphere (CA) storage where products that require 100 percent of the design airflow at all times are stored may be exempt from the variable speed control requirement. A licensed engineer must certify that the products in the cooler require continuous airflow at 100 percent speed. Variable speed control must be implemented if the space will also be used for non-CA product or operation. *[Exception 2 to §120.6 (a) 3B]*
3. The variable speed control is not mandatory for spaces that are used solely for quick chilling or quick freezing of products. Such spaces have design cooling capacities that are greater than 240 Btu/hr-ft² of floor area, which is equivalent to 2 tons per 100ft² of floor area. However, variable speed control must be implemented if the spaces are used for storage for any length of time, regardless of how much refrigeration capacity is installed in the space. [Exception 3 to §120.6 (a) 3B].

Example 10-10

Question

A split system with a packaged air-cooled condensing unit with a single 30 HP compressor with unloaders serves two direct expansion evaporators in a 3,200 ft² cooler. Are the evaporator fans required to have variable speed control?

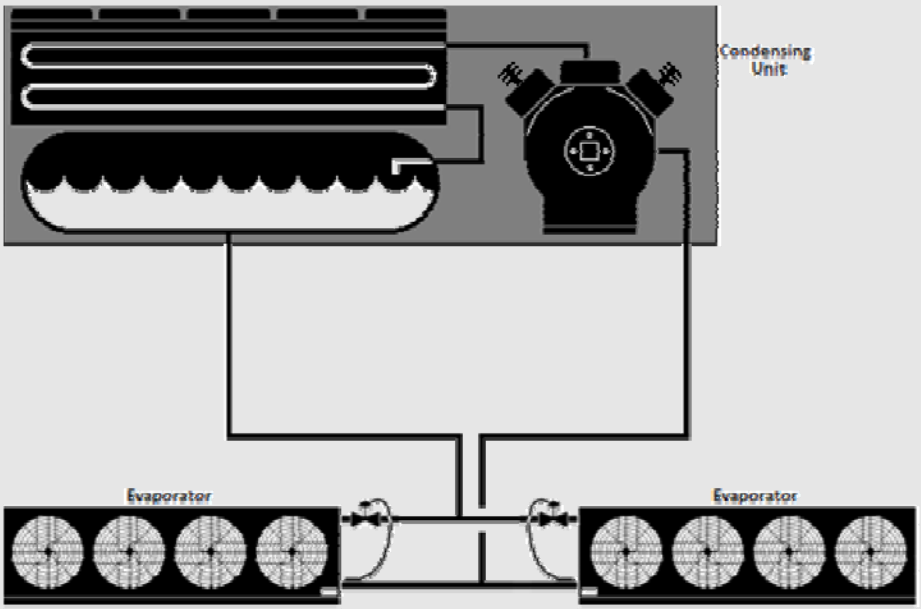

Answer

Yes. Since the compressor has a variable capacity capability in the form of unloaders, the evaporator fans are required to have variable speed control.

Example 10-11

Question

A refrigeration system utilizes two reciprocating compressors without variable capacity capability connected in parallel, and serves multiple evaporators in a 10,000 ft² cooler. Are the evaporator fans required to have variable speed control?

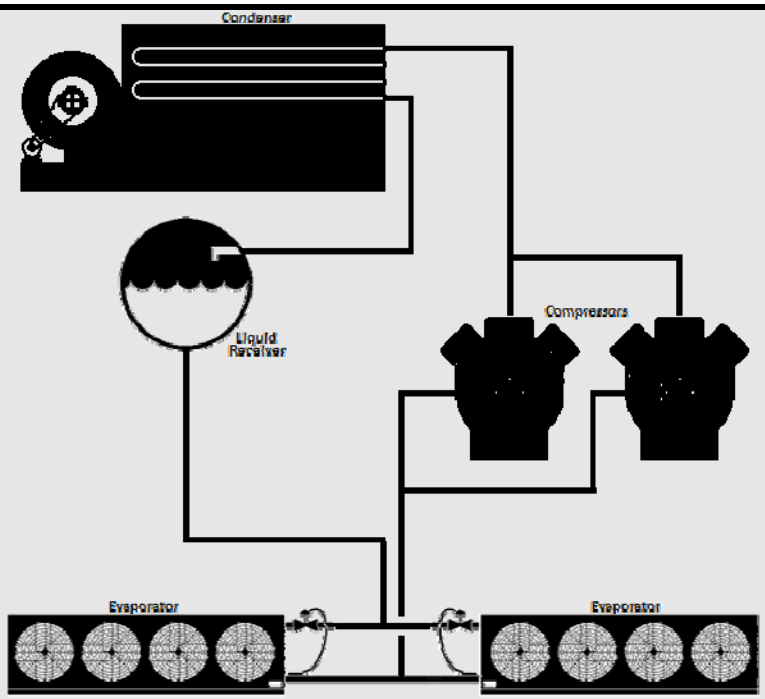

Answer

Yes. Since the evaporators are served by more than one compressor, they must have variable speed control, even though the compressors are not equipped with capacity control devices (e.g. unloaders).

In practice, the designer should consider the steps of capacity necessary to allow stable control. For small systems, the designer may consider use of control that proportionally controls both compressor capacity steps and speed steps in unison. As long as this control scheme is in response to space temperature, it would be consistent with the Standards.

Example 10-1212

Question

A -20°F (-29°C) freezer has a number of recirculated evaporator coils that were selected to meet the design load at a 10°F (5.5°C) temperature difference (TD). The evaporator fan motors utilize variable speed drives and the control system varies the fan speed in response to space temperature. What should the freezer saturated suction temperature be in order to achieve proper control and savings – by allowing fan speed control to act as the primary means of temperature control.

Answer

Since the coils were designed at a 10°F (5.5°C) TD and the target freezer temperature is -20°F (-7°C), the saturated evaporating temperature should be -30°F (-34°C) (-20°F minus 10°F); with the compressor controlled at a lower temperature, based on the design piping pressure drop. For example with 2°F (1°C) of piping losses, the compressor control setpoint would be -32°F (-36°C).

The purpose of this example is to show how evaporator temperature and coil capacity can be considered and maintained in order to achieve proper variable speed fan operation and savings. Settings could be further fine-tuned through observation of the required suction pressure to meet cooling loads and achieve minimum fan speeds average load periods, yet with a suction pressure no lower than necessary.

Example 10-13

Question

An existing refrigerated warehouse space has eight existing evaporators that do not have variable speed control. Six of the eight evaporators are being replaced with new evaporators. Do the new evaporators require variable speed control?

Answer

No. Since all the evaporators are not being replaced, the new evaporators do not require variable speed control.

The reason for this is that effective space temperature control would often require that the entire space utilize a consistent control scheme which could require a disproportional cost. While not required by the Standards, in many instances it may still be very cost effective to add variable speed control to existing as well as new evaporators in this situation.

Continuously variable speed control is not mandatory for evaporators that are served by a single compressor that does not have variable capacity capability (i.e. the compressor cycles on and off in response to space temperature). For these systems, evaporator airflow must be reduced by at least 40 percent when the compressor is off. This can be accomplished in a number of ways, for example:

- Two speed evaporator fan control, with speed reduced by at least 40% when cooling is satisfied and the compressor is off.
- Turning off a portion of the fans in each evaporator to accomplish at least 40% reduction in fan power. Typically baffles are required to prevent reverse flow through fans that are turned off.
- Turning off all fans when the compressor is off. With this strategy a duty cycle can be employed to provide period forced fan operation to maintain air circulation, if the “on” period is limited to 25% of the duty cycle while the compressor is off.

Example 10-16

Question

A split system with a packaged air-cooled condensing unit utilizing a single cycling compressor without unloaders serves two evaporators in a cooler. Each evaporator has five fans. What options does the system designer have to meet the requirements for evaporator coils served by a single cycling compressor?

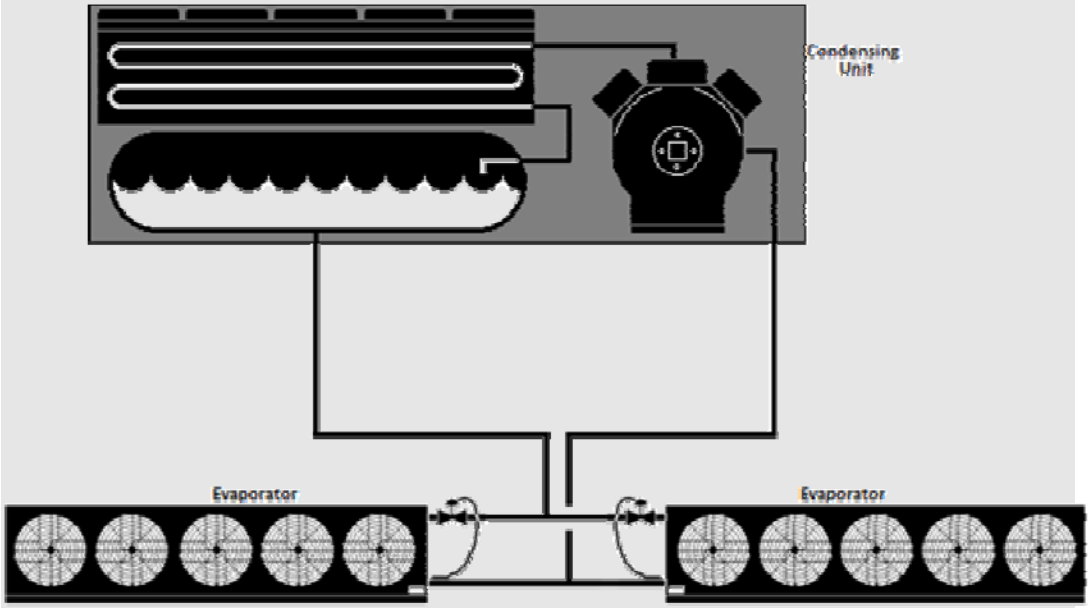

Answer

Multiple methods can be used to reduce airflow by at least 40% when the compressor is off, or turn all fans off with a 25% duty cycle.

Example 1: The designer may specify two-speed fans, or utilize variable frequency drives or other speed-reduction devices to reduce the fan speed to 60% or less when the compressor is off.

Example 2: The designer may utilize controls that cycle at least four of the ten fans off when the compressor is cycled off. This would most likely be accomplished by cycling two fans off on each evaporator.

A. Condensers

§120.6(a)4

New condensers on new refrigeration systems must follow the condenser sizing, fan control, and efficiency requirements as described in §120.6(a)4.

Condenser Sizing

Sections §120.6(a)4A and §120.6(a)4B describe minimum sizing requirements for new condensers serving new refrigeration systems. Fan-powered evaporative condensers, as well as water-cooled condensers served by fluid coolers and cooling towers are covered in Section §120.6(a)4A. Fan-powered air-cooled condensers are covered by Section §120.6(a)4B.

Condensers must be sized to provide sufficient heat rejection capacity under design conditions while maintaining a specified maximum temperature difference between the refrigeration system saturated condensing temperature (SCT) and ambient temperature. The design condenser capacity shall be greater than the calculated combined Total Heat of Rejection (THR) of the dedicated compressors that are served by the condenser. If multiple condensers are specified, then the combined capacity of the installed condensers shall be greater than the calculated heat of rejection. When determining the design THR for the purpose of this requirement, reserve or backup compressors may be excluded from the calculations.

There is no limitation on the type of condenser that may be used. The choice may be made by the system designer, considering the specific application, climate, water availability, etc.

The Standards include an exception to Sections §120.6(a)4A and 4B for condensers serving refrigeration systems for which more than 20% of the design cooling load comes from quick chilling or freezing space, or process (non-space) refrigeration cooling. Title 24 defines quick chilling or freezing space as a space with a design refrigeration evaporator capacity greater than 240 Btu/hr-ft² of floor area, which is equivalent to 2 tons per 100ft² of floor area, at system design conditions.

The sizing requirements for air-cooled condensers (Sections §120.6(a)4B) do not apply to the condensers included in air-cooled condensing units. Condensing units include compressor(s), condenser, liquid receiver, and control electronics are packaged in a single product. However, this exception applies only if the compressor(s) in the condensing units have a nameplate size totaling less than 100HP.

Example 10-14

Question

A new food processing facility is being constructed that will include an 800ft² blast freezer, a holding freezer, and a loading dock. The design evaporator capacity of the blast freezer is 40 TR (tons of refrigeration). The combined evaporator capacity of the freezer and loading dock is 60 TR. Does the condenser group have to comply with the sizing requirements in §120.6(a)4A?

Answer

The blast freezer evaporator capacity divided by the floor area is 100TR/800ft², which is equal to 12.5 TR/100ft². That means this particular blast freezer is deemed quick freezing space by the Standards. Therefore, the condenser group serving the refrigeration system does not have to comply with §120.6(a)4A, since 40% (i.e. greater than 20%) of the design refrigeration capacity is from quick freezing.

Example 10-15

Question

The refrigerated warehouse system shown below has a backup or “swing” compressor. Does the heat rejection from this compressor need to be included in the condenser sizing calculations?

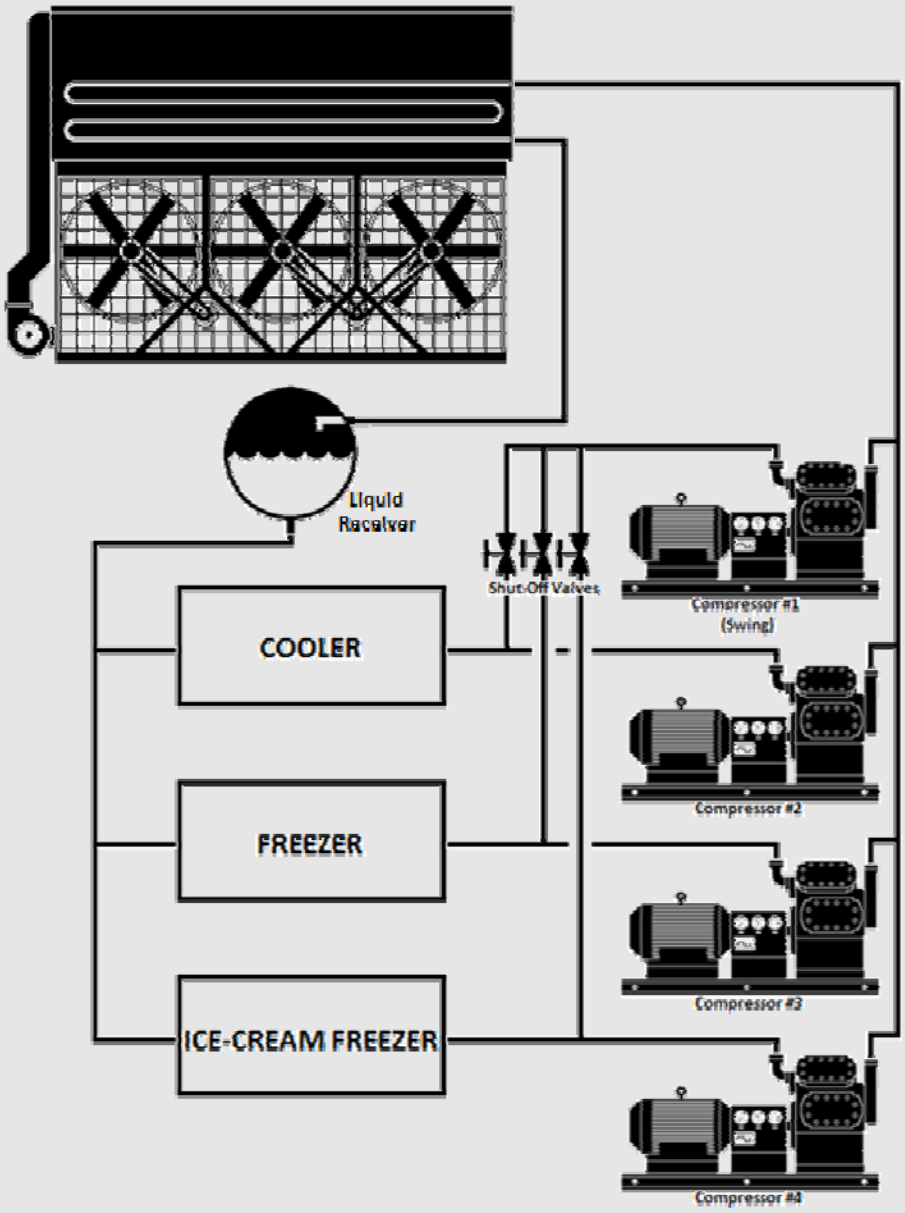

Answer

It depends.

A swing compressor may be designed solely for back-up of multiple suction groups or it may be included in one suction group and necessary to meet the design load of that suction group, but in an emergency is also capable of providing back-up for other compressors. If the compressor is solely for use as back-up, it would be excluded from the heat rejection calculation for the purposes of the Standards. In this case, the calculations would include the heat of rejection from Compressors 2, 3, and 4 and would exclude Compressor 1.

Section §120.6(a)4A Sizing of Evaporative Condensers, Fluid Coolers, and Cooling Towers

Section §120.6(a)4A provides maximum design SCT values for evaporative condensers as well as systems consisting of a water-cooled condenser served by a cooling tower or fluid cooler. For the purpose of this Section, designers should use the 0.5 percent design wet-bulb temperature (WBT) from Table 2-3 – Design Day Data for California Cities in the Reference Joint Appendices JA2 to demonstrate compliance with this requirement. The maximum design SCT requirements are listed in *Table 10-2*.

Table 10-2 –Maximum Design SCT Requirements for Evaporative Condensers and Water-Cooled Condensers Served by Cooling Towers and Fluid Coolers

0.5% DESIGN WET-BULB TEMPERATURE	MAXIMUM DESIGN SCT
≤ 76°F (24°C)	Design WBT plus 20°F (11°C)
Between 76°F (24°C) and 78°F (26°C)	Design WBT plus 19°F (10.5°C)
≥ 78°F (26°C)	Design WBT plus 18°F (10°C)

Example 10-16

Question

A refrigerated warehouse is being constructed in Fresno, California. The refrigeration system will be served by an evaporative condenser. What is the sizing requirement for the condenser selected for this system?

Answer

The 0.5% design wetbulb temperature (WBT) from Joint Appendix JA-2 for Fresno, California, is 73°F. Therefore, the maximum design SCT for the refrigerant condenser is 73°F + 20°F = 93°F. The selected condenser for this system must be capable of rejecting the total system design THR at 93°F SCT, and 73°F WBT.

Example 10-17

Question

What is the minimum size for a condenser for a refrigeration system with the following parameters?

Located in Fresno, California
Design SST: 10°F
Suction group: 3 equal-sized dedicated screw compressors (none are backup units)
Evaporative condenser
200 TR (tons refrigeration) cooling load

Answer

From the previous example, it was determined that the design wetbulb temperature (WBT) to demonstrate compliance for Fresno, California is 73°F and the maximum design SCT for the evaporative condenser is 93°F (73°F + 20°F). We will assume the system designer determined a 2°F loss between the compressors and condenser. The designer first calculates the total heat of rejection (THR) for the suction group at the design conditions of 10°F SST and 95°F SCT. The selected compressors each have a rated capacity of 240 tons of refrigeration and will absorb 300 horsepower at the design conditions. Therefore, the calculated THR for one compressor is:

$$240\frac{TR}{compressor}\ X\ 3\ compressors\ X\ 12{,}000\frac{Btu/hr}{TR} +\ 300\ HP\ x\ 2{,}545\frac{Btu/hr}{HP}$$
$$= 10{,}930{,}500\ Btu/hr$$

To comply with the Standards, a condenser (or group of condensers) must be selected that is capable of rejecting at least 10,930,500 Btu/hr at 93°F SCT and 73°F WBT.

§120.6(a)4B Sizing of Air-Cooled Condensers

Section 120.6(a)4B provides maximum design SCT values for air-cooled condensers. For the purpose of this Section, Designers should use the 0.5 percent design dry-bulb temperature (DBT) from Table 2-3 – Design Day Data for California Cities in the Reference Joint Appendices JA2 to demonstrate compliance with this requirement.

Standard practice is for published condenser ratings to assume the capacity of air-cooled condensers is proportional to the temperature difference (TD) between SCT and DBT, regardless of the actual ambient temperature entering the condenser. For example, the capacity of an air-cooled condenser operating at an SCT of 80°F with a DBT of 70°F is assumed to be equal to the same unit operating at 110°F SCT and 100°F DBT, since the TD across the condenser is 10°F in both examples. Thus,

unlike evaporative condensers, the requirement for air-cooled condensers does not have varying sizing requirements for different design ambient temperatures.

However, the Standards have different requirements for air-cooled condensers depending on the space temperatures served by the refrigeration system. The maximum design SCT requirements are listed in Table 10-3.

Table 10-3 – Maximum Design SCT Requirements for Air-Cooled Condensers

REFRIGERATED SPACE TYPE	SPACE TEMPERATURE	MAXIMUM SCT
Cooler	≥ 28°F (-2°C)	Design DBT plus 15°F (8.3°C)
Freezer	< 28°F (-2°C)	Design DBT plus 10°F (5.6°C)

Often, a single refrigeration system and its associated condenser will serve a mix of cooler and freezer spaces. In this instance, the maximum design SCT shall be a weighted average of the requirements for cooler and freezer spaces, based on the design evaporator capacity of the spaces served.

Example 10-18

Question

An air-cooled condenser is being sized for a system that has half of its installed capacity serving cooler space and the other half serving freezer space. What is the design TD to be added to the design dry bulb temperature?

Answer

Using Table 10-3, air-cooled condensers for coolers have a design approach of 15°F (8.3°C) and for freezers a design approach of 10°F (5.6°C). When a system serves freezer and cooler spaces, a weighted average should be used based on the installed capacity. To calculate the weighted average, multiply the percent of the total installed capacity dedicated to coolers by 15°F (8.3°C). Next, multiply the percent of the total installed capacity dedicated to freezers by 10°F (5.6°C). The sum of the two results is the design condensing temperature approach. In this example, the installed capacity is evenly split between freezer and cooler space. As a result, the design approach for the air-cooled condenser is 12.5°F (6.9°C).

$$(50\% * 15°\text{F}) + (50\% * 10°\text{F}) = 7.5°\text{F} + 5°\text{F} = 12.5°\text{F}$$

Fan Control

Condenser fans for new air-cooled or evaporative condensers, or fans on cooling towers or fluid coolers used to reject heat on new refrigeration systems, must be continuously variable speed. Variable frequency drives are commonly used to provide continuously variable speed control of condenser fans although controllers designed to vary the speed of electronically commutated motors may be used to control these types of motors. All fans serving a common high side, or cooling water loop for cooling towers and fluid coolers, shall be controlled in unison. Thus, in normal operation, the fan speed of all fans within a single condenser or set of condensers serving a common high-side should modulate together, rather than running fans at different speeds or staging fans off. However, when fan speed is at the minimum practical level usually no higher than 10-20%, the fans may be staged off to further reduce condenser capacity. As load increases, fans should be turned back on prior to significantly increasing fan speed, recognizing a control band is necessary to avoid excessive fan cycling.

To minimize overall system energy consumption, the condensing temperature setpoint must be continuously reset in response to ambient temperatures, rather than using a fixed setpoint value. This strategy is also termed ambient-following control, ambient-reset, wetbulb following and drybulb following—all referring to control logic which changes the condensing temperature target in response to ambient conditions at the condenser. The control system calculates a target saturated condensing temperature that is higher than the ambient temperature by a predetermined temperature difference (i.e. the condenser control TD). Fan speed is then modulated according to the calculated target SCT. The target SCT for evaporative condensers or water-cooled condensers (via cooling towers or fluid coolers) must be reset according to ambient wet bulb temperature, and the target SCT for air-cooled condensers must be reset according to ambient dry bulb temperature.

The condenser control TD is not specified in the Standards. The nominal control value is often less than the condenser design TD; however the value for a particular system is left up to the system designer. Since the intent is to utilize as much condenser capacity as possible without excessive fan power, common practice for refrigerated warehouse systems is to optimize the control TD over a period of time such that the fan speed is in a range of approximately 60-80% during normal operation (i.e. when not at minimum SCT). While not required, evaporative condensers and systems utilizing fluid coolers and cooling towers may also vary the condenser control TD as a function of actual WBT, to account for the properties of moist air, which reduce the effective condenser capacity at lower wetbulb temperatures.

The minimum saturated condensing temperature setpoint must be 70°F (21°C) or less. For systems utilizing halocarbon refrigerants with glide, the SCT setpoint shall correlate with a midpoint temperature (between the refrigerant bubble-point and dew point temperatures) of 70°F (21°C) or less. As a practical matter, a maximum SCT setpoint is also commonly employed to set an upper bound on the control setpoint in the event of a sensor failure and to force full condenser operation during peak ambient conditions. This value should be set high enough that it does not interfere with normal operation.

Split air-cooled condensers are sometimes used for separate refrigeration systems, with two circuits and two rows of condenser fans. Each condenser half would be controlled as a separate condenser. If a condenser has multiple circuits served by a common fan or set of fans, the control strategy may utilize the average condensing temperature or the highest condensing temperature of the individual circuits as the control variable for controlling fan speed.

Alternative control strategies are permitted to the condensing temperature reset control required in Section §120.6(a)4E. The alternative control strategy must be demonstrated to provide equal or better performance, as approved by the Executive Director.

Example 10-19

Question

A refrigerated warehouse with evaporative condensers is being commissioned. The control system designer has utilized a wet bulb-following control strategy to reset the system saturated condensing temperature (SCT) setpoint. The refrigeration engineer has calculated that adding a TD of 15°F (8.3°C) above the ambient wet bulb temperature should provide a saturated condensing temperature setpoint that minimizes the combined compressor and condenser fan power usage throughout the year. What might the system SCT and SCT setpoint trends look like over an example day?

Answer

The following figure illustrates what the actual saturated condensing temperature and SCT setpoints could be over an example day using the wet bulb-following control strategy with a 15°F (8.3°C) TD and also observing the 70°F (21°C) minimum condensing temperature requirement. As the figure shows, the SCT setpoint is continuously reset to 15°F (8.3°C) above the ambient wet bulb temperature until the minimum SCT setpoint of 70°F is reached. The figure also shows a maximum SCT setpoint (in this example, 90°F (32.2°C) which may be utilized to limit the maximum control setpoint, regardless of the ambient temperature value or TD parameter.

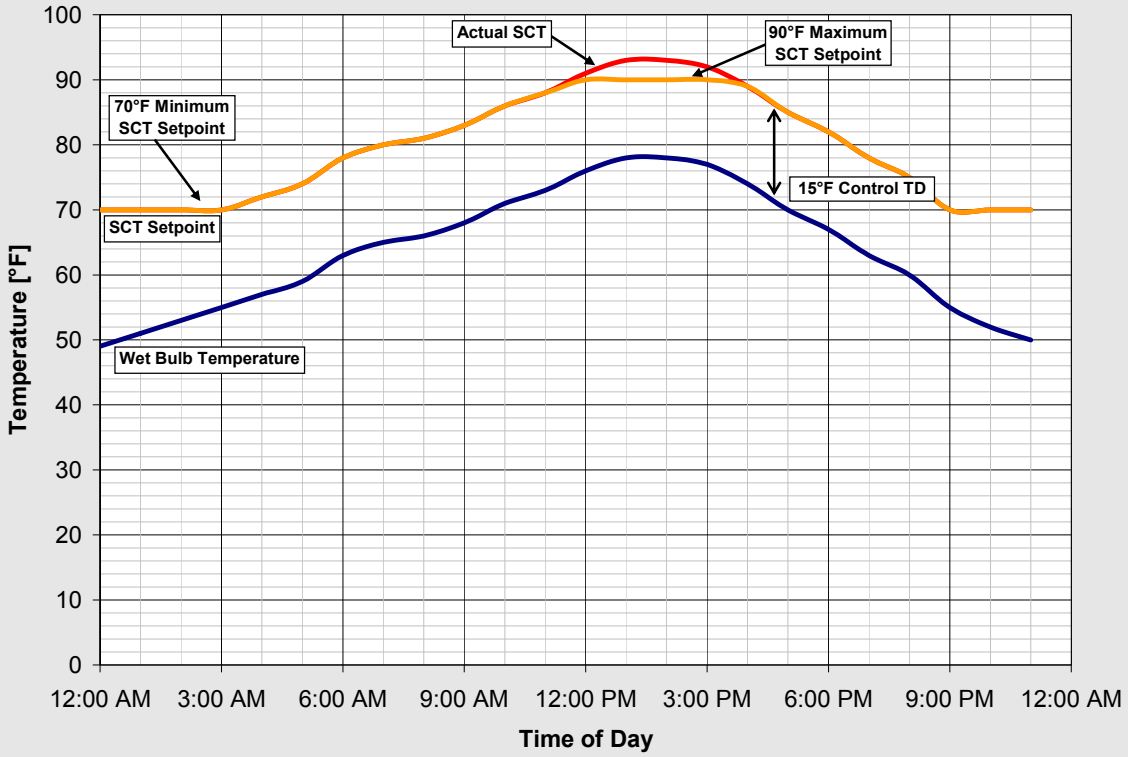

Example 10-20

Question

A cold storage facility with an air-cooled condenser is being commissioned. The control system designer has utilized a drybulb-following control strategy to reset the system saturated condensing temperature (SCT) setpoint. The refrigeration engineer has calculated that adding a TD of 11°F (6.1°C) above the ambient drybulb temperature should provide a saturated condensing temperature setpoint that minimizes the combined compressor and condenser fan power usage throughout the year. What might the system SCT and SCT setpoint trends look like over an example day?

Answer

The following figure illustrates the actual saturated condensing temperature and SCT setpoints over an example day using the drybulb-following control strategy with an 11°F (6.1°C) TD and also observing the 70°F (21°C) minimum condensing temperature requirement. As the figure shows, the SCT setpoint is continuously reset 11°F (6.1°C) above the ambient drybulb temperature, but is bounded by the minimum and maximum SCT setpoints. The figure also shows a maximum SCT setpoint (in this example, 90°F (32.2°C) which may be utilized to limit the maximum control setpoint, regardless of the ambient temperature value or TD parameter.

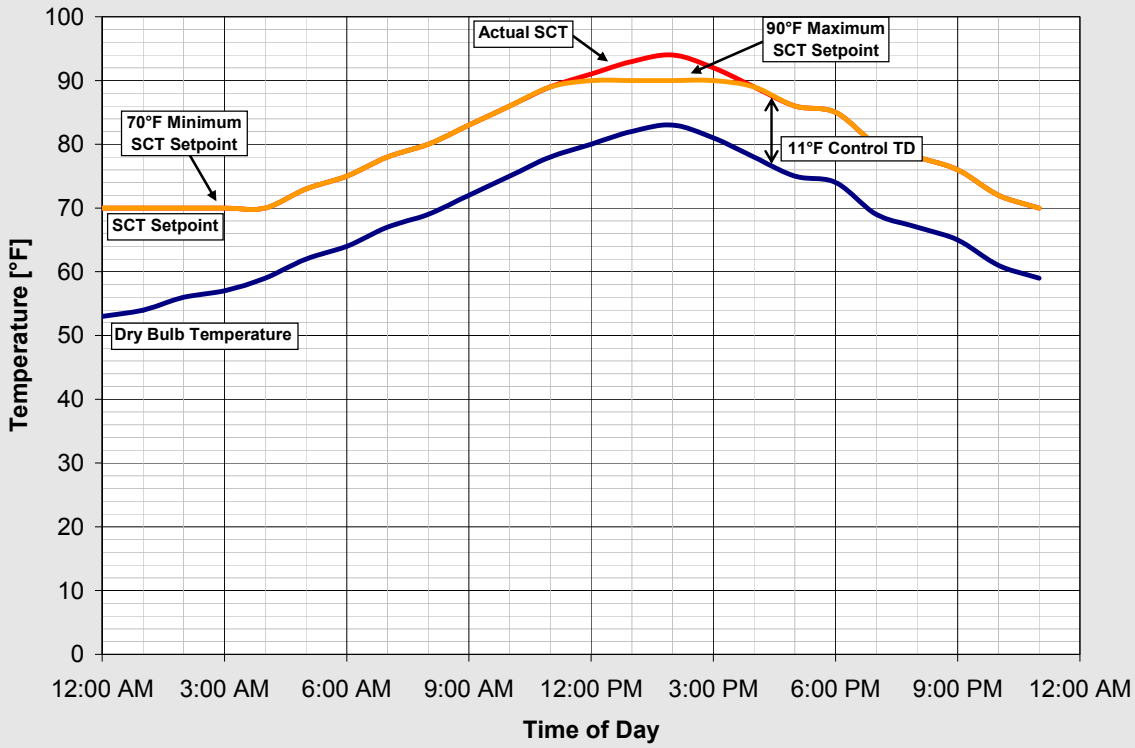

Section 120.6(a)4F Condenser Specific Efficiency

Requirements for Design Condensing Temperatures relative to design ambient temperatures, as described above for §120.6(a)4A&B, help assure that there is enough condenser capacity to keeping condensing temperatures compressor head pressures at reasonable levels. However the sizing requirements do not address condenser efficiency. For example, rather than providing amply sized condenser surface area, a condenser selection could consist of a small condenser area using a large motor to blow a large amount of air through the heat exchanger surface to achieve the design condenser TD. However, this would come at the expense of excessive fan motor horsepower. Also, relatively high fan power consumption can result from using condenser fans that have poor fan efficiency or low fan motor efficiency. Section 120.6(a)4F addresses these and other factors affecting condenser fan power by setting minimum specific efficiency requirements for condensers.

All newly installed indoor and outdoor evaporative condensers, and outdoor air-cooled condensers to be installed on new refrigeration systems shall meet the minimum specific efficiency requirements shown in Table 10-5.

Table 10-4 – Fan-powered Condensers – Minimum Specific Efficiency Requirements[1]

CONDENSER TYPE	REFRIGERANT TYPE	MINIMUM SPECIFIC EFFICIENCY	RATING CONDITION
Outdoor Evaporative-Cooled with THR Capacity > 8,000 MBH	All	350 Btuh/Watt	100°F Saturated Condensing Temperature (SCT), 70°F Outdoor Wetbulb Temperature
Outdoor Evaporative-Cooled with THR Capacity < 8,000 MBH and Indoor Evaporative-Cooled	All	160 Btuh/Watt	
Outdoor Air-Cooled	Ammonia	75 Btuh/Watt	105°F Saturated Condensing Temperature (SCT), 95°F Outdoor Drybulb Temperature
	Halocarbon	65 Btuh/Watt	
Indoor Air-Cooled	All	Exempt	

Condenser specific efficiency is defined as:

$$Condenser\ Specific\ Efficiency = Total\ Heat\ Rejection\ (THR)\ Capacity\ /\ Input\ Power$$

The total heat rejection capacity is at the rating conditions of 100°F Saturated Condensing Temperature (SCT) and 70°F outdoor wetbulb temperature for evaporative condensers, and 105°F SCT and 95°F outdoor drybulb temperature for air-cooled condensers. Input power is the electric input power draw of the condenser fan motors (at full speed), plus the electric input power of the spray pumps for evaporative condensers. The motor power is the manufacturer's published applied power for the subject equipment, which is not necessarily equal to the motor nameplate rating. Power input for secondary devices such as sump heaters shall not be included in the specific efficiency calculation.

As shown in Table 8-4 the Standards have different minimum efficiencies depending on the type of condenser that is being used. The different classifications of condenser are:

- Outdoor, evaporative, THR greater than 8,000 MBH at specific efficiency rating conditions
- Outdoor, evaporative, THR less than 8,000 MBH at specific efficiency rating conditions
- Indoor, evaporatively cooled
- Outdoor, air-cooled, ammonia refrigerant
- Outdoor, air-cooled, halocarbon refrigerant
- Indoor, air-cooled

The data published in the condenser manufacturer's published rating for capacity and power shall be used to calculate specific efficiency. For evaporative condensers, manufacturers typically provide nominal condenser capacity, and tables of correction factors that are used to convert the nominal condenser capacity to the capacity at various applied condensing temperatures and wetbulb temperatures. Usually the manufacturer publishes two sets of correction factors: one is a set of "heat rejection" capacity factors, while the others are "evaporator ton" capacity factors. Only the "heat

[1] Table is copied directly from TABLE 120.6-B FAN-POWERED CONDENSERS – MINIMUM EFFICIENCY REQUIREMENTS

rejection" capacity factors shall be used to calculate the condenser capacity at the efficiency rating conditions for the purpose of determining compliance with this section.

For air-cooled condensers, manufacturers typically provide the capacity at a given temperature difference (TD) between SCT and drybulb temperature. Manufacturers typically assume that air-cooled condenser capacity is linearly proportional to TD; the catalog capacity at 20°F TD is typically twice as much as at 10°F TD. The condenser capacity for air-cooled condensers at a TD of 10°F shall be used to calculate efficiency. If the capacity at 10°F TD is not provided, the capacity shall be scaled linearly.

Depending on the type of condenser, the actual manufacturer's rated motor power may vary from motor nameplate in different ways. Air cooled condensers with direct-drive OEM motors may use far greater input power than the nominal motor horsepower would indicate. On the other hand, evaporative condenser fans may have a degree of safety factor to allow for higher motor load in cold weather conditions (vs. the 100°F SCT/70°F WBT specific efficiency rating conditions). Thus, actual motor input power from the manufacturer must be used for direct-drive air-cooled condensers while for large (i.e. > 8,000 MBH) evaporative condensers and other belt drive condensers, the full load motor rating is generally conservative but manufacturer's applied power should be used whenever possible to more accurately determine specific efficiency.

Example 10-21

Question

An evaporative condenser is being considered for use in an outdoor application on a new refrigerated warehouse. The refrigerant is ammonia. The condenser manufacturer's catalog provides the following information:

Model Number	Base Heat Rejection (MBH)
A441	4410
B487	4866
C500	4998
D551	5513
E559	5589
F580	5885
G591	5909
H598	5983
I631	6300
J687	6865

Condensing Temperature (°F)	Entering Wetbulb Temperature (°F)					
	62	64	66	68	70	72
95	0.88	0.92	0.97	1.02	1.06	1.10
96.8	0.84	0.88	0.92	0.97	1.02	1.08
97	0.82	0.86	0.90	0.94	0.99	1.03
98	0.80	0.83	0.87	0.91	0.96	1.01
99	0.77	0.80	0.84	0.87	0.92	0.97
100	0.75	0.78	0.81	0.84	0.88	0.93

For this example, model number D551 is being considered. Elsewhere in the catalog, it states that condenser model D551 has two 7.5 HP fan motors and one 5 HP pump motor. Fan motor efficiencies and motor loading factors are not provided. Does this condenser meet the minimum efficiency requirements?

Answer

First, the condenser capacity must be calculated at the efficiency rating condition. From Table 10-5, we see that the rating conditions for an outdoor evaporative condenser are 100°F SCT, 70°F WBT. From the Base Heat Rejection table above, we see the nominal capacity for model D551 is 5,513 MBH. From the Heat Rejection Capacity Factors table, we see that the correction factor for 100°F SCT, 70°F WBT is 0.88. The capacity of this model at specific efficiency rating conditions is 5,513 MBH / 0.88 = 6,264 MBH. Since 6,264 MBH is less than 8,000 MBH, we can see from Table 10-5 that the minimum specific efficiency requirement is 160 (Btu/hr)/Watt.

To calculate input power, we will assume 100% fan and pump motor loading and minimum motor efficiency since the manufacturer has not yet published actual motor input power at the specific efficiency rating conditions. We look up the minimum motor efficiency from Nonresidential Appendix NA-3: Fan Motor Efficiencies. For a 7.5 HP 4-pole open fan motor, the minimum efficiency is 91.0%. For a 5 HP 6-pole open pump motor, the minimum efficiency is 89.5%. The fan motor input power is calculated to be:

$$2\ Motors\ x\ 7.5\frac{HP}{Motor}\ x\ 746\frac{Watts}{HP}\ x\ \frac{100\%\ assumed\ loading}{91.0\%\ efficiency} = 12,297\ Watts$$

The pump motor input power is calculated to be:

$$1\ Motor\ x\ 5\frac{HP}{Motor}\ x\ 746\frac{Watts}{HP}\ x\ \frac{100\%\ assumed\ loading}{89.5\%\ efficiency} = 4,168\ Watts$$

The combined input power is therefore:

$$12,297\ Watts + 4,168\ Watts = 16,464\ Watts$$

Note: Actual motor power should be used when available (see notes in text).

Finally, the efficiency of the condenser is:

$$\frac{6,264\ MBH\ x\ 1000\frac{Btu/hr}{MBH}}{16,464\ Watts} = 381\ \frac{Btu}{hr}/Watt$$

381 Btu/hr per Watt is higher than the 160 Btu/hr per Watt requirement. This condenser meets the minimum efficiency requirements.

Section 120.6(a)4G – Condenser Fin Spacing

Air-cooled condensers shall have a fin density no greater than 10 fins per inch. Condensers with higher fin densities have a higher risk of fouling with airborne debris. This requirement does not apply to air-cooled condensers that utilize a microchannel heat exchange surface, since this type of surface is not as susceptible to permanent fouling in the same manner as traditional tube-and-fin condensers with dense fin spacing.

B. Compressors

§120.6(a)5

Compressors on new refrigeration systems must follow the design and control requirements as described in §120.6(a)5.

Minimum Condensing Temperature

Floating head control is one of the largest energy savings measures applied to refrigeration systems. This control attempts to keep condensing temperatures as low as possible (while not consuming too much condenser fan energy) as this reduces compressor head pressure which directly impact compressor energy. When ambient temperatures are low the primary constraint on how low the condensing temperature

can be reset is the design requirements of the compressor and associated system components.

Section 120.6 (a)5A addresses the compatibility of the compressor design and components with the requirements for floating head control. All compressors that discharge to the condenser(s) and all associated components (coalescing oil separators, expansion valves for liquid injection oil cooling, etc.) must be capable of operating at a condensing temperature of 70°F (21°C) or less. Note that oil separator sizing is often governed by the minimum condensing temperature as well as other factors, such as the maximum suction temperature. Suction temperatures above the design value may occur under floating suction temperature control schemes.

The system designer should also keep in mind that other design parameters such as piping run-lengths or evaporator defrost requirements must be considered to meet this requirement.

Screw Compressor Control at Part-Load

New open-drive screw compressors in new refrigeration systems with a design saturated suction temperature (SST) of 28°F or lower shall vary compressor speed as the primary means of capacity control. The compressor speed shall reduce to the manufacturer-specified minimum speed before unloading via slide valve. Similarly, when the load increases, the compressor shall increase to 100% slide valve before increasing speed. This requirement applies only to compressors discharging to the condenser (i.e. single stage or the high stage of a two-stage system) and only to suction groups that consist of a single compressor.

An exception to §120.6(a)5 is provided for compressors on a refrigeration system with more than 20% of the design cooling load from quick chilling or freezing space, or non-space process refrigeration cooling. The “refrigeration system” refers to the entire associated system, (i.e. the refrigerant charge) not the suction group. While variable speed compressor control may be cost effective in many instances and may be considered by the system designer, this exception exists to allow for situations such as seasonal processes with low operating hours or loads that may be precisely matched to a fully loaded compressor.

New screw compressors with a motor nameplate power greater than 150HP shall incorporate the capability to automatically vary the volume ratio (i.e. variable Vi) in order to optimize efficiency at off-design operating conditions.

Example 10-22

Question

The system shown below has three 200 HP open-drive screw compressors serving three different suction levels and one 200 HP backup or swing open-drive screw compressor that can be valved into any of the three suction lines. Does this count as having more than one compressor per suction group and exempt the compressors from the requirements in §120.6(a)5B?

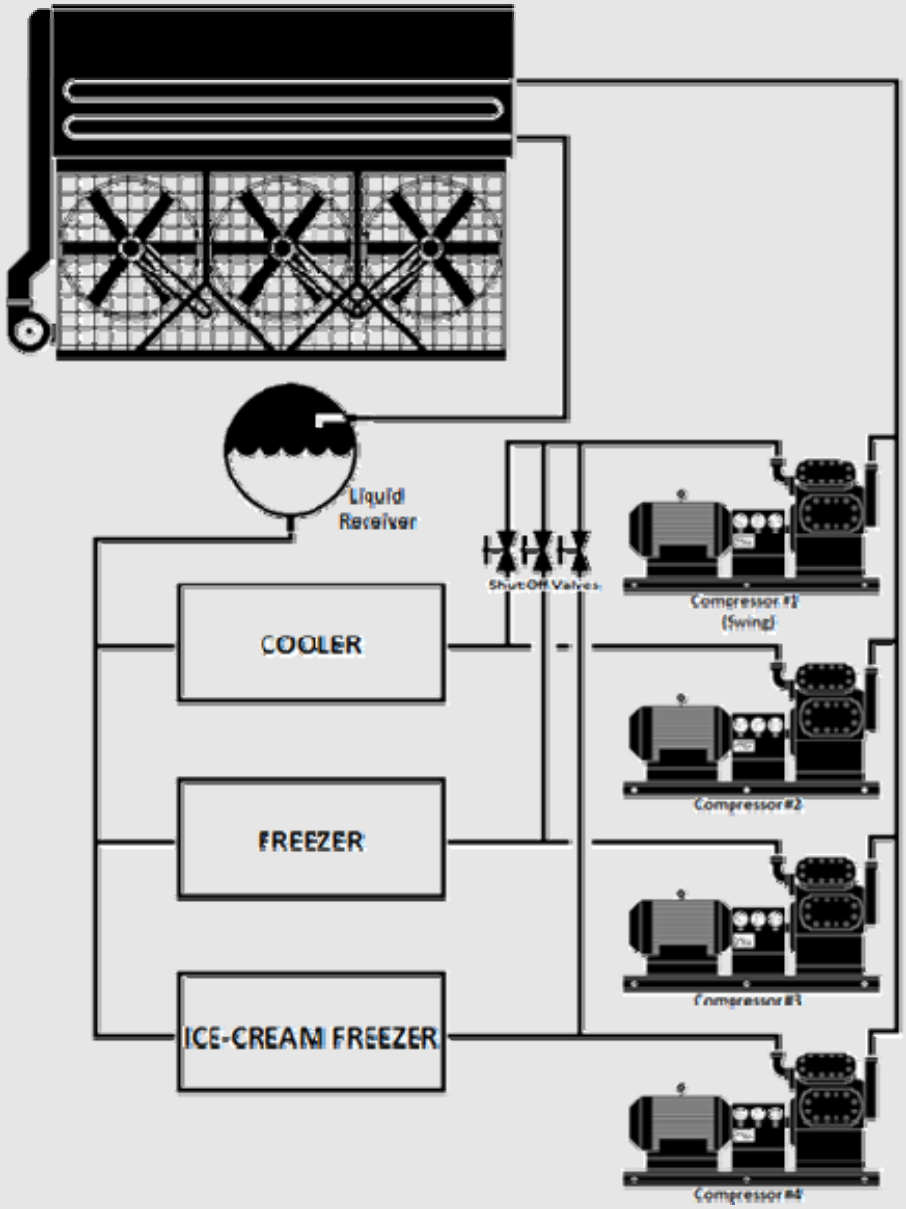

Answer

Probably not. The Exception 1 to §120.6(a)5B only applies when a suction group has two or more dedicated compressors. A compressor that is used solely as backup does not count as a dedicated compressor. As a result, all compressors (1, 2, 3, and 4) in the example above must comply with §120.6(a)5B and use variable speed control as the primary means of capacity control.

However, if Compressor 1 is actually required to meet the design load of one of the suction groups, it could be considered part of that suction group and variable speed control would not be required. Whether a swing compressor is really a back-up compressor or part of a suction group should be apparent from the design loads and capacities listed in the design documents.

C. Acceptance Requirements

§120.6(a)7

The Standards have acceptance test requirements for:

1. Electric underslab heating controls
2. Evaporator fan motor controls
3. Evaporative condensers
4. Air-cooled condensers
5. Variable speed compressors

These test requirements are described in Chapter 10 and the Reference Nonresidential Appendix NA7.10. They are described briefly in the following paragraphs.

Electric Underslab Heating Controls

NA7.10.1

Controls for underslab electric heating controls, when used for freeze protection on freezer floors, are tested to ensure heat is automatically turned off during summer on-peak electric periods.

Evaporator Fan Motor Controls

NA7.10.2

Evaporator equipment and controls are checked for proper operation. The controls are tested to ensure the fan speed automatically varies in response the temperature and/or humidity of the space.

Evaporative Condensers

NA7.10.3.1

Evaporative condensers and variable speed fan controls are checked to ensure the required minimum SCT setpoint of 70°F or lower is implemented, and the condenser fans continuously vary in unison to maintain a target temperature difference between the SCT and the wet bulb temperature. Trends of wet bulb temperature and SCT can be used to verify the controls over time.

The condenser control TD or offset is a key parameter in fine-tuning the operation of the fans and maximizing the energy savings. In best practice, this control setting should be adjusted during average loaded so that the fan average 60-80% speed when in the control range (i.e. between the minimum and maximum SCT setpoints).

Air-cooled Condensers

NA7.10.3.2

Air-cooled condensers and variable speed fan controls are checked to ensure the required minimum SCT setpoint of 70°F or lower is implemented, and the condenser fans continuously vary in unison to maintain a target temperature difference between the SCT and dry bulb temperature. Trends of dry bulb temperature and SCT can be used to verify the controls over time.

The condenser control TD is a key parameter in fine-tuning the operation of the fans and maximizing the energy savings. This control setting should be adjusted during average loaded so that condenser capacity is effectively utilized but fan speed is not excessive.

Variable Speed Compressors

NA7.10.4

The controls and equipment for the variable speed control of screw compressors is checked and certified as part of the acceptance requirements. The compressor should unload capacity by reducing speed to the minimum speed setpoint before unloading by slide valve or other means. Control system trend screens can also be used to verify that the speed varies automatically in response to the load.

10.2.5 Additions and Alterations

§140.9

A. Requirements

Requirements related to additions and alterations are covered by the Standards in §149. Definitions relevant to refrigerated warehouses include:

- An addition is a change to an existing refrigerated warehouse that increases refrigerated floor area and volume. See §149(a)1. Additions are treated like new construction.
- When an unconditioned or conditioned building; or unconditioned or conditioned part of a building adds refrigeration equipment so that it becomes refrigerated, this area is treated as an addition.
- An alteration is a change to an existing building that is not an addition or repair. An alteration could include installing new evaporators, a new lighting system, or a change to the building envelope, such as adding insulation. See §149(b)1.
- A repair is the reconstruction or renewal of any part of an existing building or equipment for the purpose of its maintenance. For example, a repair could include the replacement of an existing evaporator or condenser. See §149(c).

When refrigeration is provided for an alteration or addition by expanding an existing system, that existing system need not comply with the mandatory measures for refrigerated warehouses. However, any addition or altered space must meet all applicable mandatory requirements. Repairs must not increase the preexisting energy consumption of the repaired component, system, or equipment; otherwise, it is considered to be an alteration.

Example 10-23

Question

The new construction is an addition to an existing refrigerated warehouse. The new space is served by an existing refrigeration plant. Does the refrigeration plant need to be updated to meet the Standards?

Answer

No. The new construction must comply with the Standards; however, the existing refrigeration equipment is exempt from the Standards.

Example 10-24

Question

The new construction includes an addition to refrigerated space and expansion of the existing refrigeration plant. Is the existing refrigeration equipment subject to the Standards requirements?

Answer

No. Only the new equipment installed in the added refrigerated space is subject to the requirements of the Standards. If the equipment added to the existing plant is served by a separate high side condenser loop, then the new compressors and condensers must comply with the Standards. If the new equipment shares the same high side condenser loop, then it does not need to comply with the Standards.

Example 10-25

Question

An upgrade to an existing refrigerated storage space includes replacing all of the existing evaporators with new evaporators. Do the new evaporators need to comply with the Standards?

Answer

Yes. A complete renovation of the evaporators in the space is considered to be an alteration. The alteration requirements apply when all of the evaporators in the space are changed.

Example 10-26

Question

An existing refrigerated storage space is adding additional evaporators to meet an increase in the refrigeration load. Do the new evaporators need to comply with the Standards?

Answer

No. The alteration requirements apply only when all of the evaporators in the space are changed.

Example 10-27

Question

An existing evaporator is being replaced by a new evaporator as part of system maintenance. Does the new evaporator need to comply with the Standards?

Answer

No. Replacement of an evaporator during system maintenance is considered a repair. However, the energy consumption of the new evaporator must not exceed that of the equipment it replaced.

10.2.6 Compliance Documentation

A. Forms RWH-1C through RWH-5C for Refrigerated Warehouses

At the time a building permit application is submitted to the enforcement agency, the applicant also submits plans and energy compliance documentation. This section describes the forms and recommended procedures documenting compliance with the requirements of the Standards for refrigerated warehouses. The following discussion is addressed to the designer preparing construction

documents and compliance documentation, and to the enforcement agency plan checkers who are examining those documents for compliance with the Standards.

B. RWH-1C for Refrigerated Warehouses: Certificate of Compliance

RWH - 1C is the primary form for Refrigerated Warehouses, which provides compliance information for the use of the enforcement agency's field inspectors. This form must be included on the plans, usually near the front of the assembly drawings. A copy of these forms should also be submitted to the enforcement agency along with the rest of the compliance submittal at the time of building permit application. With enforcement agency approval, the applicant may use alternative formats of these forms (rather than the Energy Commission's forms), provided the information is the same and in similar format.

Project Description

PROJECT NAME is the title of the project, as shown on the plans and known to the enforcement agency.

CLIMATE ZONE is the California Climate zone in which the project is located. See Reference Joint Appendix JA2 for a listing of climate zones.

CONDITIONED FLOOR AREA has a specific meaning under the Standards. The number entered here should match the floor area entered on the other forms.

PROJECT ADDRESS is the address of the project as shown on the plans and known to the enforcement agency.

DATE is the last revision date of the plans. If the plans are revised after this date, it may be necessary to re-submit the compliance documentation to reflect the altered design. Note that it is the enforcement agency's discretion whether or not to require new compliance documentation.

General Information

PHASE OF CONSTRUCTION indicates the status of the building project described in the compliance documents. Refer to Section 1.7 for detailed discussion of the various choices.

NEW CONSTRUCTION should be checked for all new buildings, newly conditioned space or for new construction in existing buildings (tenant improvements, see Section 1.7.12.) that are submitted for envelope compliance.

ADDITION should be checked for an addition which is not treated as a stand-alone building, but which uses option 2 described in Section 1.7.14. Tenant improvements that increase conditioned floor area and volume are additions.

ALTERATION should be checked for alterations to an existing building mechanical systems (see Section 1.7.13). Tenant improvements are usually alterations.

Documentation Author's Declaration Statement

The CERTIFICATE of COMPLIANCE is signed by both the Documentation Author and the Principal Refrigerated Warehouse Designer who is responsible for preparation of the plans of building. This latter person is also responsible for the energy compliance documentation, even if the actual work is delegated to a different person acting as Documentation Author. It is necessary that the compliance documentation be consistent with the plans.

DOCUMENTATION AUTHOR is the person who prepared the energy compliance documentation and who signs the Declaration Statement. The person's telephone number is given to facilitate response to any questions that arise. A Documentation Author may have additional certifications such as an Energy Analyst or a Certified Energy Plans Examiner certification number. Enter number in the EA# or CEPE# box.

Principal Refrigerated Warehouse Designer's Declaration Statement

The Declaration Statement is signed by the person responsible for preparation of the plans for the building. This principal designer is also responsible for the energy compliance documentation, even if the actual work is delegated to someone else (the Documentation Author as described above). It is necessary that the compliance documentation be consistent with the plans. The Business and Professions Code governs who is qualified to prepare plans and therefore to sign this statement. See Section 2.2.2 Permit Application for applicable text from the Business and Professions Code.

Mandatory Measures Note Block

The person with overall responsibility must ensure that the Mandatory Measures that apply to the project are listed on the plans. The format of the list is left to the discretion of the Principal Refrigerated Warehouse Designer.

Refrigerated Warehouse Compliance Forms and Worksheets Block

Principle Refrigerated Warehouse Designer should indicate the compliance forms and worksheets that are applicable to the project.

Required Acceptance Tests

This form is new to the set of compliance forms for Refrigerated Warehouses.

PROJECT NAME is the title of the project, as shown on the plans and known to the enforcement agency.

DATE is the last revision date of the plans. If the plans are revised after this date, it may be necessary to re-submit the compliance documentation to reflect the altered design. Note that it is the enforcement agency's discretion whether or not to require new compliance documentation.

The form includes a fill-in-the-blank table to indicate which acceptance tests apply to the project. Acceptance tests for Refrigerated Warehouses are described in Nonresidential Appendix NA7 and are listed below.

Test per Section NA7	*Applicable Equipment or System*
NA7.10.1	Electric resistance underslab heating system
NA7.10.2	Evaporator fan motor controls
NA7.10.3.1	Evaporative condensers
NA7.10.3.2	Air-cooled condensers
NA7.10.4	Variable speed compressors

The Principle Refrigerated Warehouse Designer should list the equipment and systems that require acceptance tests and check the boxes next to the acceptance tests that apply to the respective equipment and systems. The Enforcement Agency should not accept the form unless the correct boxes are

checked and/or filled in and the form is signed by the persons performing the tests.

RWH-2C for Refrigerated Warehouses: Refrigerated Warehouse Space Requirements

Page 1 of 3

Page 1 of 3 includes Insulation Details.

PROJECT NAME is the title of the project, as shown on the plans and known to the enforcement agency.

DATE is the last revision date of the plans. If the plans are revised after this date, it may be necessary to re-submit the compliance documentation to reflect the altered design. Note that it is the enforcement agency‘s discretion whether or not to require new compliance documentation.

BUILDING TYPE indicates the area of the warehouse. If the Refrigerated Warehouse space is less than 3,000 square feet then does not have to comply with the space requirements of the Standards. However, it must meet the requirements of the Appliance Efficiency Regulations for walk-in coolers or freezers contained in the Appliance Efficiency Regulations (California Code of Regulations, Title 20, Sections 1601 through 1608).

TAG/ID indicates the identification name that matches the building plans.

SPACE indicates the area type, either cooler (design temperature greater than or equal to 28°F, but less than 55°F) or freezer (less than 28°F).

PRODUCTIVE UNDERSLAB HEATING indicates whether underslab heating is provided in such a way that produces productive refrigeration capacity for an associated refrigeration system.

ASSEMBLY TYPE indicates whether the assembly is a wall, roof, ceiling or floor.

INSTALLED INSULATION R-VALUE is the actual installed R-value of insulation as shown on the referenced assembly drawings of the plans.

MINIMUM REQUIRED INSULATION R-VALUE is the minimum insulation R-value specified in Table 120.6-A of the Standards.

ASSEMBLY COMPLIANCE is determined by comparing the installed R-value versus the minimum required R-value and should be indicated in the Pass/Fail checkboxes provided.

Page 2 of 3

Page 2 of 3 includes mandatory requirements for underslab heating and evaporators. As stated on the page, the required information should be either listed on the form or the page from the plans or specifications section and the paragraph displaying the required information should be indicated on the form.

Page 3 of 3

Page 3 of 3 includes Infiltration Barrier Details

PROJECT NAME is the title of the project, as shown on the plans and known to the enforcement agency.

DATE is the last revision date of the plans. If the plans are revised after this date, it may be necessary to re-submit the compliance documentation to reflect the

altered design. Note that it is the enforcement agency's discretion whether or not to require new compliance documentation.

BARRIER NAME indicates the name of the infiltration barrier that matches the building plans.

AREA indicates the area of the opening filled by the infiltration barrier.

EXEMPT indicates whether the opening is exempt from having an infiltration barrier.

BARRIER TYPE indicates whether the barrier is a strip curtain, an automatically-closing door, or an air curtain.

PASS/FAIL – The barrier passes If it is exempt or if it complies with section 120.6(a)6. Otherwise, it fails

RWH-3C for Refrigerated Warehouses: Refrigerated Warehouse System Requirements

This form includes mandatory requirements for condensers and compressors. As stated on the form, the required information should be either listed on the form or the page from the plans or specifications section and the paragraph displaying the required information should be indicated on the form.

RWH-4C for Refrigerated Warehouses: Condenser Specific Efficiency Worksheet

Page 1 of 2

This page includes the specific efficiency calculations for evaporative condensers. Fluid coolers are exempt from the specific efficiency requirements.

TAG/ID indicates the identification name of the condenser that matches the building plans.

FANS – MOTOR POWER (HP) indicates the fan motor power in HP on the name plate of the fan motor.

FANS – MOTOR EFFICIENCY indicates the fan motor efficiency on the name plate of the fan motor.

FANS – MOTOR POWER INPUT (KW) indicates the fan motor input power in kW calculated by using FANS – MOTOR POWER (HP) and FANS – MOTOR EFFICIENCY.

FANS – TOTAL FAN POWER (KW) indicates the sum of the fan motor power inputs of all fans of the condenser in kW.

PUMPS – MOTOR POWER (HP) indicates the pump motor power in HP on the name plate of the pump motor.

PUMPS – MOTOR EFFICIENCY indicates the pump motor efficiency on the name plate of the pump motor.

PUMPS – MOTOR POWER INPUT (KW) indicates the pump motor input power in kW calculated by using PUMPS – MOTOR POWER (HP) and PUMPS – MOTOR EFFICIENCY.

PUMPS – TOTAL FAN POWER (KW) indicates the sum of the total pump motor input powers of all pumps of the condenser in kW.

CONDENSER - CAPACITY (MBH) indicates the condenser heat rejection capacity from the manufacturer's catalog at 100ºF saturated condensing temperature and 70ºF ambient wetbulb temperature.

CONDENSER - TOTAL INPUT POWER (KW) indicates the sum of the input powers of all fans and pumps of the condenser in kW.

CONDENSER – SPECIFIC EFFICIENCY (BTUH/WATT) indicates the specific efficiency of the condenser calculated from CONDENSER - CAPACITY (MBH) and CONDENSER - TOTAL INPUT POWER (KW).

Page 2 of 2

This page includes the specific efficiency calculations for air-cooled condensers.

TAG/ID indicates the identification name of the condenser that matches the building plans.

NUMBER OF FANS indicates the number of fans on the condenser.

MOTOR POWER (HP) indicates the fan motor power in HP on the name plate of the fan motor.

MOTOR EFFICIENCY indicates the fan motor efficiency on the name plate of the fan motor.

TOTAL INPUT POWER (KW) indicates the sum of the input powers of all fans of the condenser in kW. It is calculated by using NUMBER OF FANS, MOTOR POWER (HP) and MOTOR EFFICIENCY.

CONDENSER - CAPACITY (MBH) indicates the condenser heat rejection capacity from the manufacturer's catalog at 105ºF saturated condensing temperature and 95ºF ambient drybulb temperature (10ºF TD).

CONDENSER – SPECIFIC EFFICIENCY (BTUH/WATT) indicates the specific efficiency of the condenser calculated from CONDENSER - CAPACITY (MBH) and TOTAL INPUT POWER (KW).

10.3 Commercial Refrigeration

10.3.1 Overview

This section of the nonresidential compliance manual addresses Section §120.6(b) of the Standards – mandatory requirements for commercial refrigeration systems in retail food stores. The chapter includes mandatory requirements for condensers, compressor systems, refrigerated display cases, refrigeration heat recovery, and acceptance testing of equipment and systems. All buildings under Part 6 of Title 24 must also comply with the General Provisions of the Standards (§100.0 – §100.2, §110.0 – §110.10, §120.0 – §120.9, §130.0 – §130.5), and additions and alterations requirements (§141.1).

A. Organization and Content

This section of the manual focuses on the Standards provisions unique to commercial refrigeration. This chapter is organized as follows:

- Section 10.3.1 Overview
- Section 10.3.2 Condensers Mandatory Requirements §120.6(b)1
- Section 10.3.3 Compressor System Mandatory Requirements §120.6(b)2
- Section 10.3.4 Refrigerated Display Case Mandatory Requirements §120.6(b)3
- Section 10.3.5 Refrigeration Heat Recovery Mandatory Requirements §120.6(b)4
- Section 10.3.6 Additions and Alterations §141.1

A. Mandatory Measures and Compliance Approaches

The energy efficiency requirements for commercial refrigeration are all mandatory. There are no prescriptive requirements or performance compliance paths for commercial refrigeration. Since the provisions are all mandatory, there are no tradeoffs allowed between the various requirements. The application must demonstrate compliance with each of the mandatory measures. Exceptions to each mandatory requirement where provided are described in each of the mandatory measure sections below.

B. Scope and Application

§120.6(b)

Commercial refrigeration requirements (§120.6(b)) were not a part of the 2008 Standards. Therefore, all the requirements related to commercial refrigeration in the 2013 Standards are new.

§120.6(b) of the Standards applies to retail food stores that have 8,000 square feet or more of conditioned area, and utilize either refrigerated display cases or walk-in coolers or freezers, which are connected to remote compressor units or condensing units. The Standards have minimum requirements for the condensers, compressor

systems, refrigerated display cases, and refrigeration heat recovery systems associated with the refrigeration systems in these facilities.

The Standards do not have minimum efficiency requirements for walk-ins, as these are deemed appliances and are covered by the California Appliance Efficiency Regulations (Title 20) and Federal Energy Independence and Security Act of 2007. Walk-ins are defined as refrigerated spaces with less than 3,000 square feet of floor area that are designed to operate below 55°F (13°C). Additionally, the Standards do not have minimum equipment efficiency requirements for refrigerated display cases, as the minimum efficiency for these units is established by Federal law in the Commercial Refrigeration Equipment Final Rule but there are requirements for display cases that do result in reduced energy consumption.

Example 10-28

Question

The only refrigeration equipment in a retail food store with 10,000 square feet of conditioned area is self-contained refrigerated display cases. Does this store need to comply with the requirements for Commercial Refrigeration?

Answer

No. Since the refrigerated display cases are not connected to remote compressor units or condensing units, the store does not need to comply with the Standards.

Example 10-29

Question

A new retail store with 25,000 square feet conditioned area has two self-contained display cases. The store also has several display case line-ups and walk-in boxes connected to remote compressors systems. Do all the refrigeration systems need to comply with the requirements for Commercial Refrigeration?

Answer

There are no provisions in the Standards for the two self-contained display cases. The refrigeration systems serving the other fixtures must comply with the Standards.

10.3.2 Requirements for Condensers

§120.6(b)1

Subsection 1 of the commercial refrigeration section addresses the mandatory requirements for condensers serving commercial refrigeration systems. These requirements only apply to stand-alone refrigeration condensers and do not apply to condensers that are part of a unitary condensing unit.

If the work includes a new condenser replacing an existing condenser, the condenser requirements do not apply if all of the following conditions apply:

1. The Total Heat of Rejection of the compressor system attached to the condenser or condenser system does not increase, and
2. Less than 25% of the attached refrigeration system compressors (based on compressor capacity at design conditions) are new, and
3. Less than 25% of the display cases (based on display case design load at applied conditions) that the condenser serves, are new. Since the compressor system loads

commonly include walk-ins (both for storage and point-of-sale boxes with doors), the 25% “display case" should be calculated with walk-ins included.

Example 10-30

Question

A supermarket remodel includes a refrigeration system modification where some of the compressors will be replaced, some of the refrigerated display cases will be replaced, and the existing condenser will be replaced. The project does not include any new load and the design engineer has determined that the total system heat of rejection will not increase. The replacement compressors comprise 20% of the suction group capacity at design conditions, and the replacement display cases comprise 20% of the portion of the design load that comes from display cases. There are no changes in walk-ins Does the condenser have to comply with the provisions of the Standards?

Answer

No. This project meets all three criteria of the exception to the mandatory requirements for condensers:

1. The new condenser is replacing an existing condenser

2. The total heat of rejection of the subject refrigeration system does not increase

3a. The replacement compressors comprise less than 25% of the suction group design capacity at design conditions

3b. The replacement display cases comprise less than 25% of the portion of the design load that comes from display cases

A. Condenser Fan Control

§120.6(b)1A,B,& C

Condenser fans for new air-cooled or evaporative condensers, or fans on air- or water-cooled fluid coolers or cooling towers used to reject heat on new refrigeration systems, must be continuously variable speed. Variable frequency drives are commonly used to provide continuously variable speed control of condenser fans and controllers designed to vary the speed of electronically commutated motors are increasingly being used for the same purpose. All fans serving a common high side, or indirect condenser water loop, shall be controlled in unison. Thus, in normal operation, the fan speed of all fans within a single condenser or set of condensers serving a common high-side should modulate together, rather than running fans at different speeds or staging fans off. However, when fan speed is at the minimum practical level minimum level, usually no higher than 10-20%, the fans may be staged off to further reduce condenser capacity. As load increases, fans should be turned back on prior to significantly increasing fan speed, recognizing a control band is necessary to avoid without excessive fan cycling. Control of air-cooled condensers may also keep fans running and use a holdback valve on the condenser outlet to maintain the minimum condensing temperature once all fans have reached minimum speed; with the holdback valve set below the fan control minimum saturated condensing temperature setpoint.

To minimize overall system energy consumption, the condensing temperature control setpoint must be continuously reset in response to ambient temperatures, rather than using a fixed setpoint value. This strategy is also termed ambient-following control, ambient-reset, wetbulb following and drybulb following—all referring to control logic which changes the condensing temperature control setpoint in response to ambient conditions at the condenser. The control system calculates a control setpoint

saturated condensing temperature that is higher than the ambient temperature by a predetermined temperature difference (i.e. the condenser control TD). Fan speed is then modulated so that the measured SCT (saturated condensing temperature) matches the calculated SCT control setpoint. The SCT control setpoint for evaporative condensers or water-cooled condensers (via cooling towers or fluid coolers) must be reset according to ambient wet bulb temperature, and the SCT control setpoint for air-cooled condensers must be reset according to ambient dry bulb temperature.

The condenser control TD is not specified in the Standard. The nominal control value is often equal to the condenser design TD; however the value for a particular system is left up to the system designer. Since the intent is to utilize as much condenser capacity as possible without excessive fan power, common practice is to optimize the control TD over a period of time such that the fan speed is in a range of approximately 60-80% during normal operation (i.e. when not at minimum SCT and not in heat recovery).

The minimum saturated condensing temperature setpoint must be 70°F (21°C) or less. For systems utilizing halocarbon refrigerants with glide, the SCT setpoint shall correlate with a midpoint temperature (between the refrigerant bubble-point and dew point temperatures) of 70°F (21°C) or less. As a practical matter, a maximum SCT setpoint is also commonly employed to set an upper bound on the control setpoint in the event of a sensor failure and to force full condenser operation during peak ambient conditions. This value should be set high enough that it does not interfere with normal operation.

Split air-cooled condensers are sometimes used for separate refrigeration systems, with two circuits and two rows of condenser fans. Each condenser half would be controlled as a separate condenser. If a condenser has multiple circuits served by a common fan or set of fans, the control strategy may utilize the average condensing temperature or the highest condensing temperature of the individual circuits as the control variable for controlling fan speed.

Alternative control strategies are permitted to the condensing temperature reset control required in Section §120.6(a)4E. The alternative control strategy must be demonstrated to provide equal or better performance, as approved by the Executive Director.

Hybrid condensers, manufactured with integral capability to operate with either air-cooled or evaporative-cooled operation, are not covered. Air-cooled condensers with separately installed evaporative precoolers added to the condenser are not considered hybrid condensers for the purpose of this Standard. Air cooled condensers with an added evaporative precooling must meet the requirements for air cooled equipment, including specific efficiency and ambient-following control.

Example 10-31

Question

A new supermarket with an evaporative condenser is being commissioned. The control system designer has utilized a wet bulb-following control strategy to reset the system saturated condensing temperature (SCT) setpoint. The refrigeration engineer has calculated that adding a TD of 15°F (8.3°C) above the ambient wet bulb temperature should provide a saturated condensing temperature setpoint that minimizes the combined compressor and condenser fan power usage throughout the year. What might the system SCT and SCT setpoint trends look like over an example day?

Answer

The following figure illustrates what the actual saturated condensing temperature and SCT setpoints could be over an example day using the wet bulb-following control strategy with a 15°F (8.3°C) TD and also observing the 70°F (21°C) minimum condensing temperature requirement. As the figure shows, the SCT setpoint is continuously reset to 15°F (8.3°C) above the ambient wet bulb temperature until the minimum SCT setpoint of 70°F is reached. The figure also shows a maximum SCT setpoint (in this example, 90°F (32.2°C) which may be utilized to limit the maximum control setpoint, regardless of the ambient temperature value or TD parameter.

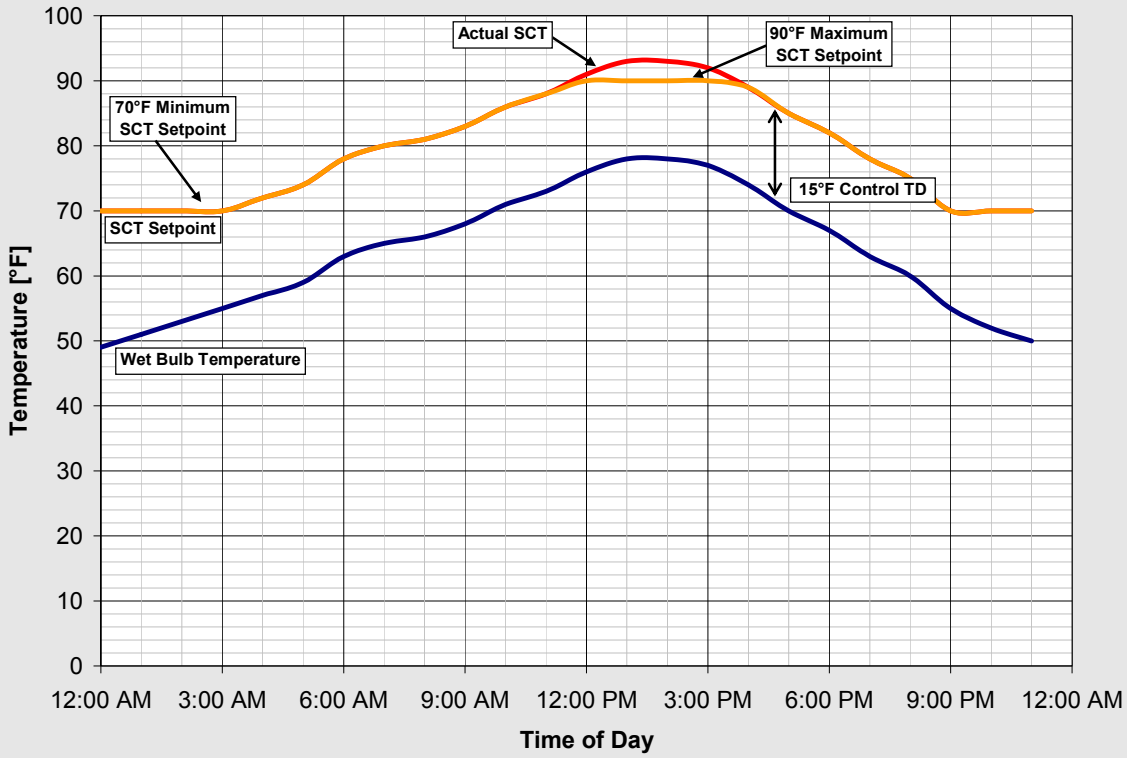

B. Condenser Specific Efficiency

All newly installed evaporative condensers and air-cooled condensers with capacities greater than 150,000 Btuh (at the specific efficiency rating conditions) shall meet the minimum specific efficiency requirements shown in Table 10-5.

Table 10-5 – Fan-powered Condensers – Minimum Specific Efficiency Requirements

Condenser Type	Minimum Specific Efficiency	Rating Condition
Evaporative-Cooled	160 Btuh/Watt	100°F Saturated Condensing Temperature (SCT), 70°F Entering Wetbulb Temperature
Air-Cooled	65 Btuh/Watt	105°F Saturated Condensing Temperature (SCT), 95°F Entering Drybulb Temperature

Condenser specific efficiency is defined as:

$$Condenser\ Specific\ Efficiency = Total\ Heat\ Rejection\ (THR)\ Capacity\ /\ Input\ Power$$

The total heat rejection capacity is defined at the rating conditions of 100°F Saturated Condensing Temperature (SCT) and 70°F outdoor wetbulb temperature for

evaporative condensers, and 105°F SCT and 95°F outdoor drybulb temperature for air-cooled condensers. Input power is the electric input power draw of the condenser fan motors (at full speed), plus the electric input power of the spray pumps for evaporative condensers. The motor power is the manufacturer's published applied power for the subject equipment, which is not necessarily equal to the motor nameplate rating. Power input for secondary devices such as sump heaters shall not be included in the specific efficiency calculation.

The data published in the condenser manufacturer's published rating for capacity and power shall be used to calculate specific efficiency. For evaporative condensers, manufacturers typically provide nominal condenser capacity, and tables of correction factors that are used to convert the nominal condenser capacity to the capacity at various applied condensing temperatures and wetbulb temperatures. Usually the manufacturer publishes two sets of correction factors: one is a set of "heat rejection" capacity factors, while the others are "evaporator ton" capacity factors. Only the "heat rejection" capacity factors shall be used to calculate the condenser capacity at the efficiency rating conditions for the purpose of determining compliance with this section.

For air-cooled condensers, manufacturers typically provide the capacity at a given temperature difference (TD) between SCT and drybulb temperature. Manufacturers typically assume that air-cooled condenser capacity is linearly proportional to TD; the catalog capacity at 20°F TD is typically twice as much as at 10°F TD. The condenser capacity for air-cooled condensers at a TD of 10°F shall be used to calculate efficiency. If the capacity at 10°F TD is not provided, the capacity shall be scaled linearly.

Depending on the type of condenser, the actual manufacturer's rated motor power may vary from motor nameplate in different ways. Air cooled condensers with direct-drive OEM motors may use far greater input power than the nominal motor horsepower would indicate. On the other hand, evaporative condenser fans may have a degree of safety factor to allow for higher motor load in cold weather conditions (vs. the 100°F SCT/70°F WBT specific efficiency rating conditions). Thus, actual motor input power from the manufacturer must be used for direct-drive air-cooled condensers. For evaporative condensers and fluid coolers, the full load motor power, using the minimum allowable motor efficiencies published in the Nonresidential Appendix NA-3: Fan Motor Efficiencies, is generally conservative but manufacturer's applied power should be used whenever possible to more accurately determine specific efficiency.

There are three exceptions to the condenser specific efficiency requirements.

1. If the store is located in Climate Zone 1 (the cool coastal region in northern California), or
2. If an existing condenser is reused for an addition of alteration, or
3. If the condenser capacity is less than 150 MBH at the specific efficiency rating conditions

Example 10-32

Question

An air-cooled condenser is being designed for a new supermarket. The refrigerant is R-507. The condenser manufacturer's catalogue states that the subject condenser has a capacity of 500 MBH at 10°F TD between entering air and saturated condensing temperatures with R-507 refrigerant. Elsewhere in the catalog, it states that the condenser has ten ½ hp fan motors that draw 450 Watts each. Does this condenser meet the minimum efficiency requirements?

Answer

First, the condenser capacity must be calculated at the specific efficiency rating condition. From Table 10-5, we see that the rating conditions for an air-cooled condenser are 95°F entering drybulb temperature and 105°F SCT. The catalog capacity is at a 10°F temperature difference, which is deemed suitable for calculating the specific efficiency (105°F SCT - 95°F entering Drybulb = 10°F TD). Input power is equal to the number of motors multiplied by the input power per motor:

$$10\ fan\ motors\ x \frac{450\ Watts}{fan\ motor} = 4{,}500\ Watts$$

The specific efficiency of the condenser is therefore:

$$\frac{500\ MBH\ x\ \frac{1{,}000\ Btu/hr}{MBH}}{4{,}500\ Watts} = \left(\frac{111\ Btu/hr}{Watt}\right)$$

This condenser has a specific efficiency of 111 Btuh per Watt, which is higher than the 65 Btuh per Watt minimum requirement. This condenser meets the minimum specific efficiency requirements.

Example 10-33

Question

An evaporative condenser is being designed for a new supermarket. The manufacturer's catalog provides a capacity of 2,000 MBH at standard conditions of 105°F SCT and 78°F wetbulb temperature. The condenser manufacturer's catalog provides the following heat rejection capacity factors:

Non-standard Conditions Heat Rejection Capacity			
Saturated Condensing Temperature (°F)	Wet Bulb Temperature (°F)		
	70	75	78
95	1.20	1.35	1.65
100	0.95	1.10	1.25
105	0.80	0.90	1.00

Elsewhere in the catalog, it states that the condenser model has one 10 HP fan motor and one 2 HP pump motor. Fan motor efficiencies and motor loading factors are not provided by the manufacturer. Does this condenser meet the minimum efficiency requirements?

Answer

First, the condenser capacity must be calculated at the specific efficiency rating condition. From Table 10-5, we see that the rating conditions for an evaporative condenser are 100°F SCT, 70°F WBT and a minimum specific efficiency requirement is 160 Btuh/Watt. From the Heat Rejection Capacity Factors table, we see that the correction factor at 100°F SCT and 70°F WBT is 0.95. The capacity of this model at the specific efficiency rating conditions is:

$$2{,}000\ MBH\ /\ 0.95\ =\ 2{,}105\ MBH$$

To calculate input power, we will assume 100% fan and pump motor loading and minimum motor efficiencies since the manufacturer has not yet published actual motor specific efficiency at the specific efficiency rating conditions. We look up the minimum motor efficiency from Nonresidential Appendix NA-3: Fan Motor Efficiencies. For a 10 HP 6-pole open fan motor, the minimum efficiency is 91.7%. For a 2 HP 6-pole open pump motor, the minimum efficiency is 88.5%. The fan motor input power is calculated to be:

$$1\ Motor\ x\ \frac{10\ HP}{Motor}\ x\ \frac{746\ Watts}{HP}\ x\ \frac{100\%\ assumed\ loading}{91.7\%\ efficiency} = 8{,}135\ Watts$$

The pump motor input power is calculated to be:

$$1\ Motor\ x\ \frac{2\ HP}{Motor}\ x\ \frac{746\ Watts}{HP}\ x\ \frac{100\%\ assumed\ loading}{88.5\%\ efficiency} = 1{,}686\ Watts$$

The combined input power is therefore:

$$8{,}135\ Watts + 1{,}686\ Watts = 9{,}821\ Watts$$

Note: Actual motor power should be used when available (see note in text).

Finally, the efficiency of the condenser is:

$$(2{,}105\ MBH\ x\ \frac{1{,}000\ Btu/hr}{MBH})/(9{,}821\ Watts) = 214\ Btuh/Watt$$

214 Btuh per Watt is higher than the 160 Btuh per Watt requirement; this condenser meets the minimum efficiency requirements.

Air-cooled condensers shall have a fin density no greater than 10 fins per inch. Condensers with higher fin densities have a higher risk of fouling with airborne debris. This requirement does not apply for air-cooled condensers that utilize a micro-channel heat exchange surface, since this type of surface is not as susceptible to permanent fouling in the same manner as traditional tube-and-fin condensers with tight fin spacing.

The fin spacing requirement does not apply to condensers that are reused for an addition or alteration.

10.3.3 Compressor System Requirements

§120.6(b)2

This section addresses mandatory requirements for remote compressor systems and condensing units used for refrigeration. In addition to the requirements described below, all the compressors and all associated components must be designed to operate at a minimum condensing temperature of 70°F (21°C) or less.

A. Floating Suction Pressure Controls

§120.6(b)2A

Compressors and multiple-compressor suction groups must have floating suction pressure control to reset the saturated suction pressure control setpoint based on the temperature requirements of the attached refrigeration display cases or walk-ins.

Exceptions to the floating suction pressure requirements are:

1. Single compressor systems that do not have continuously variable capacity capability
2. Suction groups that have a design saturated suction temperature of 30°F or higher
3. Suction groups that comprise the high side of a two-stage or cascade system
4. Suction groups that primarily serve chillers for secondary cooling fluids
5. Existing compressor systems that are reused for an addition or alteration.

The examples of a two-stage system and a cascade system are shown in Figure 10-12 and Figure 10-13, respectively. Figure 10-13 shows a secondary fluid system.

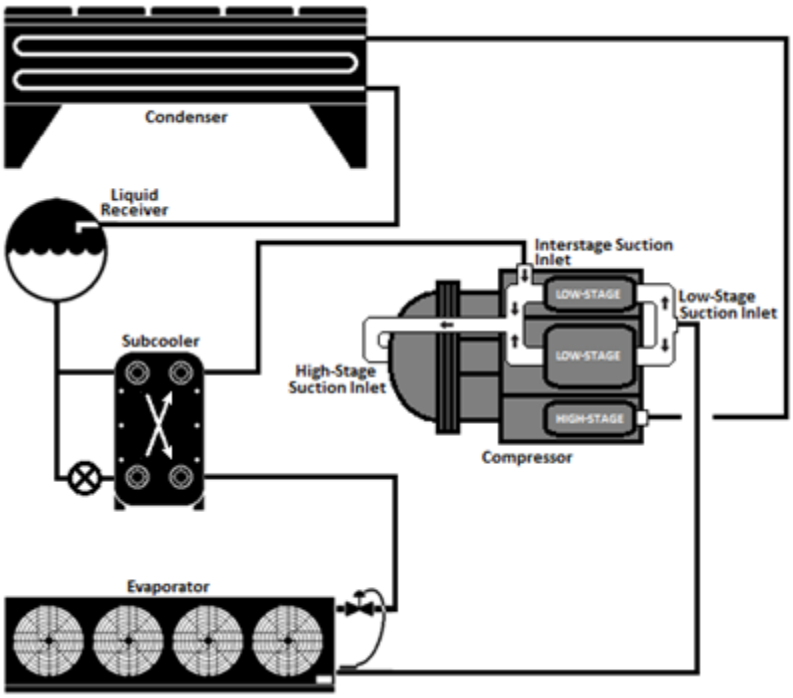

Figure 10-12 –Two-stage System using a Two-Stage Compressor

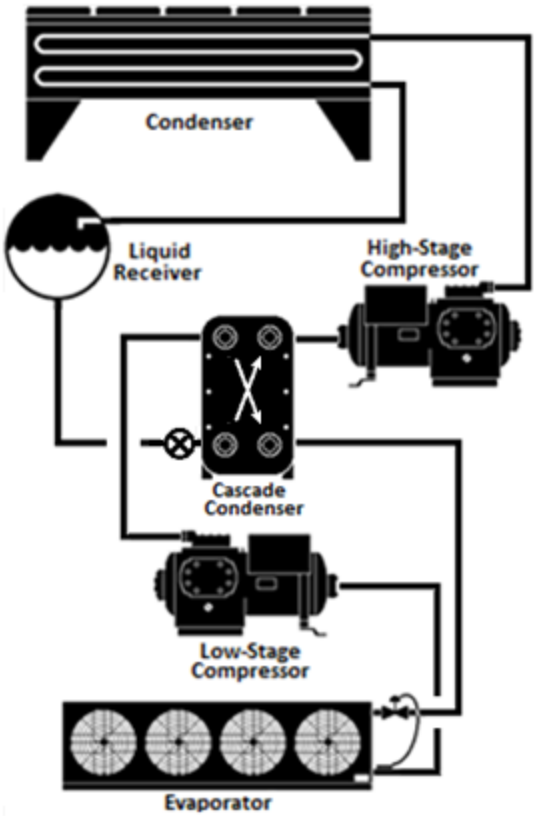

Figure 10-13 – Cascade System

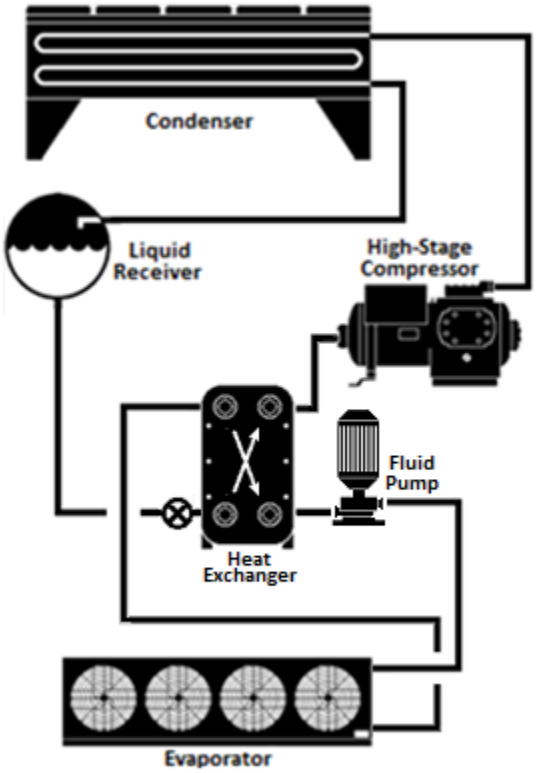

Figure 10-14 – Secondary Fluid System

Example 10-34

Question

A retail food store has four suction groups, A, B1, B2 and C, with design saturated suction temperatures (SST) of -22°F, -13°F, 28°F and 35°F, respectively. System A is a condensing unit. The compressor in the condensing unit is equipped with two unloaders. Suction group B1 consists of a single compressor with no variable capacity capability. Suction group B2 has four compressors with no variable capacity capability and suction group C has three compressors with no variable capacity capability. Which of these suction groups are required to have floating suction pressure control?

Answer

Suction Group B1 is the only suction group that is not required to have a floating suction pressure control. The rationale is explained below.

Suction group A: Although the suction group has only one compressor, the compressor has variable capacity capability in the form of unloaders. Therefore, the suction group is required to have floating suction pressure control.

Suction group B1: The suction group has only one compressor with no variable capacity capability. Therefore, the suction group is not required to have floating suction pressure control.

Suction group B2: Although the suction group has compressors with no variable capacity capability, the suction group has multiple compressors which can be sequenced to provide variable capacity capability. Therefore, the suction group is required to have floating suction pressure control.

Suction group C: The design SST of the suction group is higher than 30°F. Therefore, the suction group is not required to have floating suction pressure control.

Example 10-35

Question

A retail food store has two suction groups, a low temperature suction group A (-22°F design SST) and medium temperature suction group B (18°F design SST). Suction group A consists of three compressors. Suction group B has four compressors that serve a glycol chiller working at 23°F. Which of these suction groups are required to have floating suction pressure control?

Answer

Suction group A: The suction group has multiple compressors. Therefore, the suction group is required to have floating suction pressure control.

Suction group B: Although the suction group has multiple compressors, it serves a chiller for secondary cooling fluid (glycol). Therefore, the suction group is not required to have floating suction pressure control.

Example 10-36

Question

A retail food store is undergoing an expansion and has two refrigeration systems: an existing system and a new CO_2 cascade system. The existing system consists of four compressors and a design SST of 18°F. The cascade refrigeration system consists of four low temperature compressors operating at -20°F SST and three medium temperature compressors operating at 26°F SST. Which of these systems are required to have floating suction pressure control?

Answer

Existing system: Although the system has multiple compressors, the compressor system is being reused, and the existing rack controller and sensors may not support floating suction pressure control. Therefore, the system is not required to have floating suction pressure control.

Cascade system: Only low temperature suction group of the system is required to have floating suction pressure control.

Evaporator coils are sized to maintain a design fixture temperature under design load conditions. Design loads are high enough to cover the highest expected load throughout the year, and inherently include safety factors. The actual load on evaporator coils varies throughout the day, month and year, and an evaporator coil operating at the design saturated evaporating temperature (SET) has excess capacity at most times. The SET can be safely raised during these times, reducing evaporator capacity and reducing the required “lift” of the suction group, saving energy at the compressor while maintaining proper fixture (and product) temperature.

In a floating suction pressure control strategy, the suction group target saturated suction pressure (SST) setpoint is allowed to vary depending on the actual requirements of the attached loads, rather than fixing the SST setpoint low enough to satisfy the highest expected yearly load. The target setpoint is adjusted so that it is just low enough to satisfy lowest current SET requirement of any attached refrigeration load while still maintaining target fixture temperatures, but not any higher. The controls are typically bound by low and high setpoints limits. The maximum float value should be established by the system designer, but a minimum value equal to the design SST (that is no negative float) and a positive float range of 4-6°F of saturation pressure equivalent have been used successfully.

Figure 10-15 shows hourly values for floating suction pressure control over a one week period, expressed in equivalent saturation temperature. The suction pressure control setpoint is adjusted to meet the temperature setpoint at the most demanding fixture or walk-in. The difference in SST between the floating suction pressure control and fixed suction pressure control translates into reduced compressor work and thus energy savings for the floating suction control.

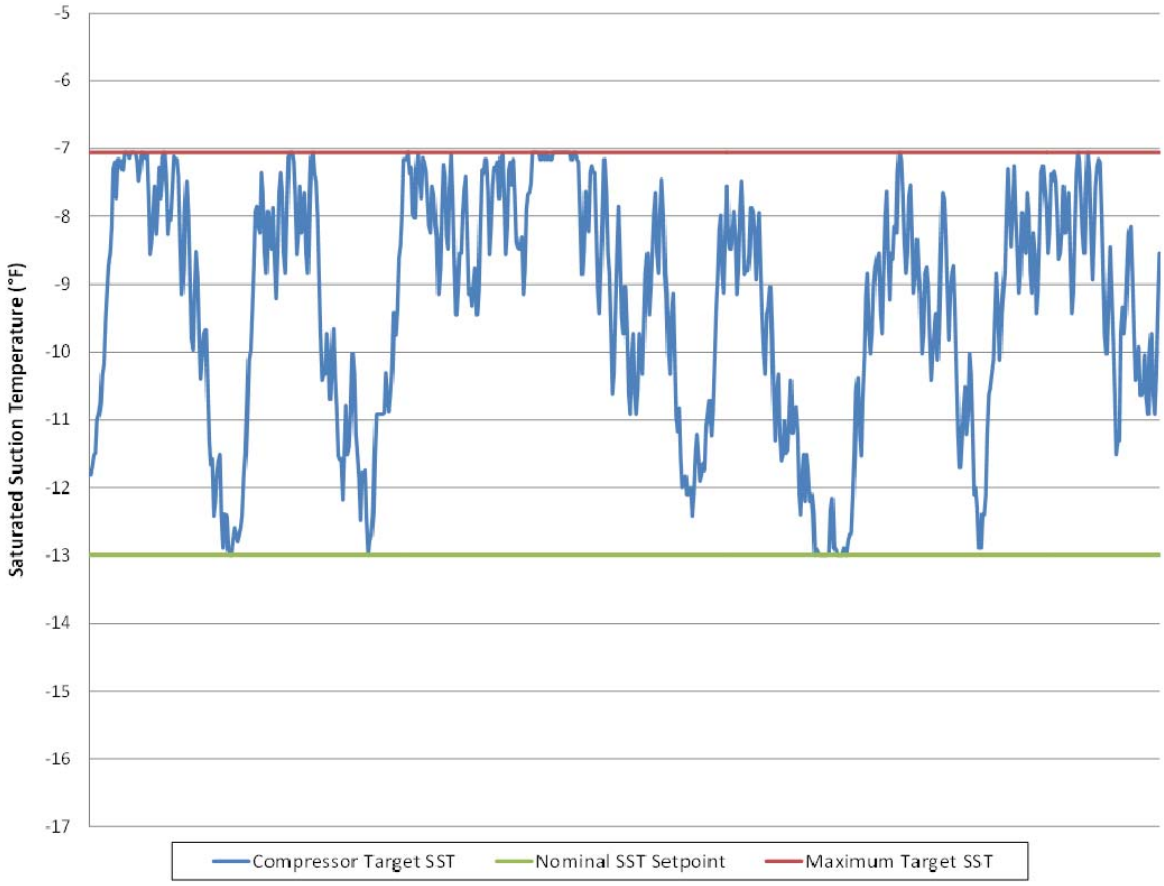

Figure 10-15 – Example of Floating Suction Pressure Control

Floating Suction Pressure Control with Mechanical Evaporator Pressure Regulators

Mechanical evaporator pressure regulators (EPR valves) are often used on multiplex systems to maintain temperature by regulating the SET at each multiple evaporator connected to the common suction group, and often to also function as a suction-stop valve during defrost. EPR valves throttle to maintain the pressure at the valve inlet and thus indirectly control the temperature at the case or walk-in. The valves are manually adjusted to the pressure necessary to provide the desired fixture or walk-in air temperature. The load (circuit) with the lowest EPR pressure governs the required compressor suction pressure setpoint.

Floating suction pressure on a system with EPR valves requires special attention to valve settings on the circuit(s) used for floating suction pressure control. EPR valves on these circuit(s) must be adjusted “out of range”, meaning the EPR pressure must be set lower than what would otherwise be used to maintain temperature. This keeps the EPR valve from interfering with the floating suction control logic. In some control systems, two circuits are used to govern floating suction control; commonly

designated as primary and secondary float circuits. EPR valves may also be equipped with electrically controlled wide-open solenoid pilots for more fully automatic control if desired.

Similar logic is applied on systems using on/off liquid line solenoid valves (LLSV) for temperature control, with the control of the solenoid adjusted slightly out of range to avoid interference with floating suction pressure.

These procedures have been employed to float suction on supermarket control systems since the mid-80's, however careful attention is still required during design, start-up and commissioning to insure control is effectively coordinated.

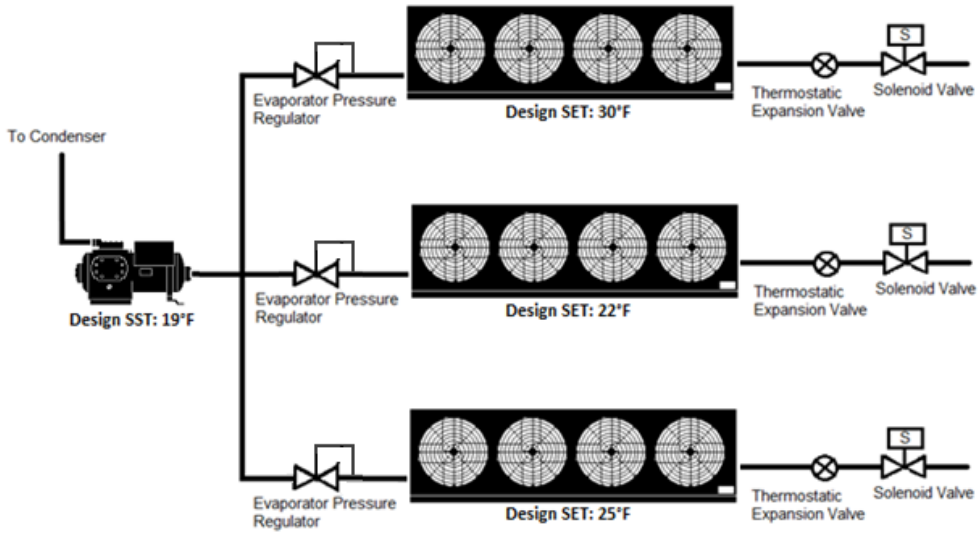

Figure 10-16 – Evaporators with Evaporative Pressure Regulator Valves

Floating Suction Pressure Control with Electronic Suction Regulators

An electronic suction regulator (ESR) valve is an electronically controlled valve used in the place of a mechanical evaporator pressure regulator valve. ESRs are known in industry as electronic suction regulator (ESR) or electronic evaporator pressure regulator (EEPR). It is important to note that ESR valves are not pressure regulators; instead they control the flow through the evaporator based on a setpoint air temperature at the case or walk-in. ESR valves are modulated to maintain precise temperature. This provides more accurate temperature compared to an EPR which controls temperature indirectly through pressure and is subject to pressure drop in piping and heat load (and thus TD) on the evaporator coil.

Floating suction pressure strategies with ESR valves vary depending on the controls manufacturer, but will generally allow for more flexibility than systems with EPR valves. In general, the control system monitors how much each ESR valve is opened. If an ESR is fully open, indicating that the evaporator connected to the ESR requires more capacity, the control system will respond by decrementing the SST setpoint. If all ESR valves are less than fully open, the control system increments the suction pressure up until an ESR valve fully opens. At this point, the control system starts floating down the suction pressure again. This allows suction pressure to be no lower than necessary for the most demanding fixture.

Figure 10-17 shows multiple evaporators controlled by ESR valves connected to a common suction group.

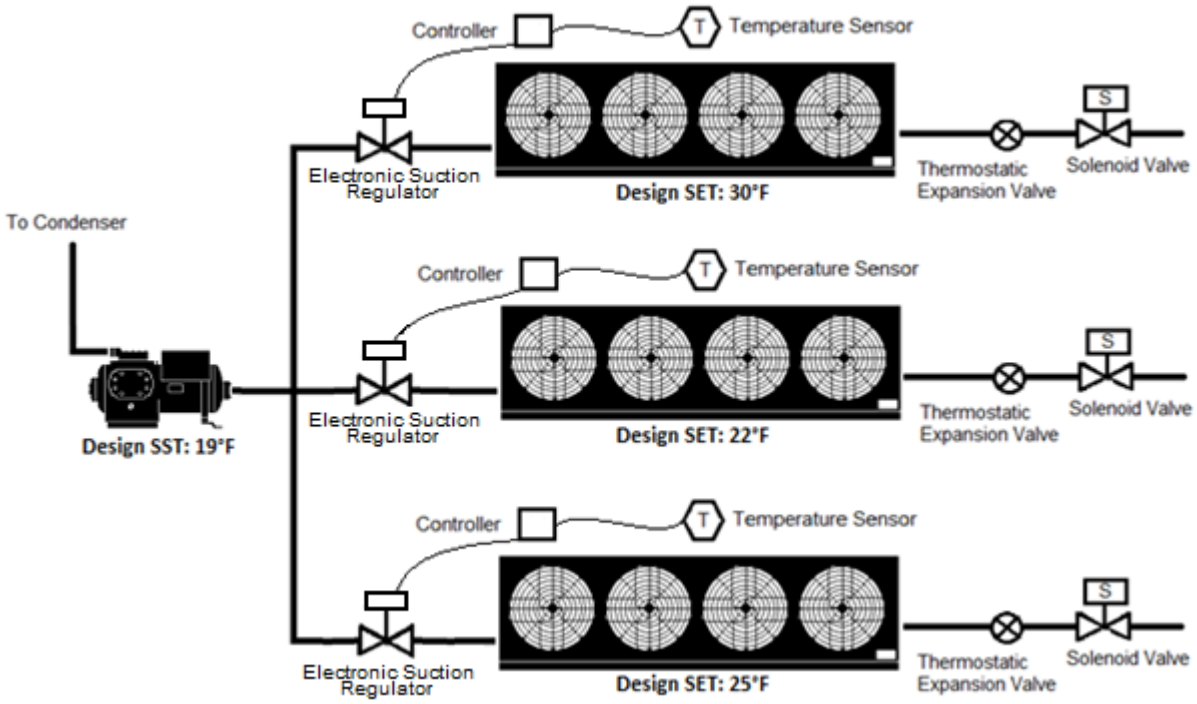

Figure 10-17 – DX Evaporators with ESRs on a Multiplex System

B. Liquid Subcooling

§120.6(b)2B

Liquid subcooling must be provided for all low temperature compressor systems with a design cooling capacity of 100,000 Btuh or greater and with a design saturated suction temperature of -10°F or lower. The subcooled liquid temperature of 50°F or less must be maintained continuously at the exit of the subcooler. Subcooling load may be handled by compressor economizer ports, or by using a suction group operating at a saturated suction temperature of 18°F or higher. Figure 10-18 and Figure 10-19 show example subcooling configurations.

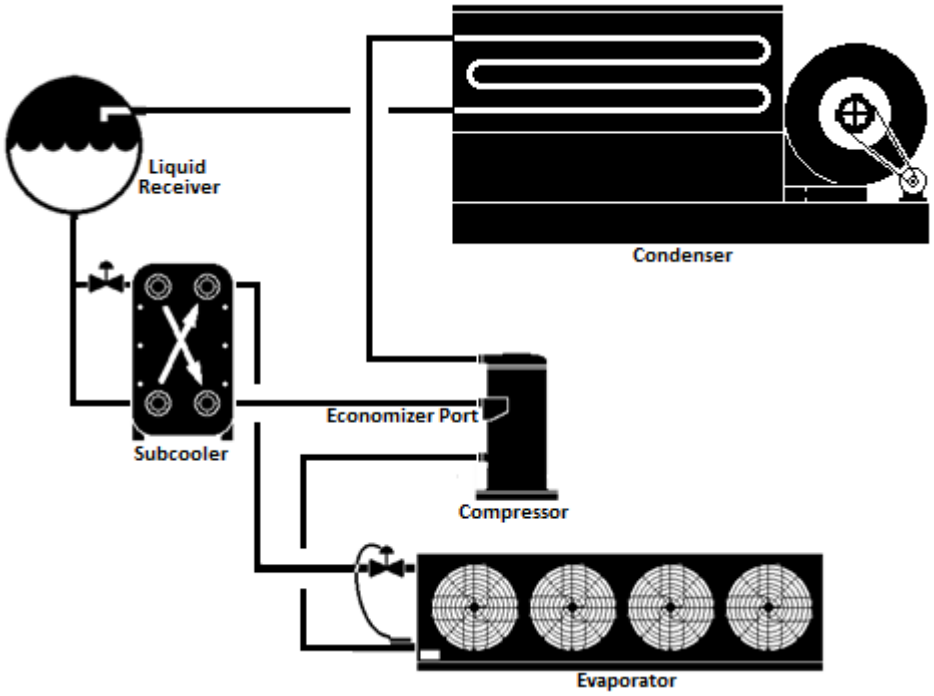

Figure 10-18 – Liquid Subcooling Provided by Scroll Compressor Economizer Ports

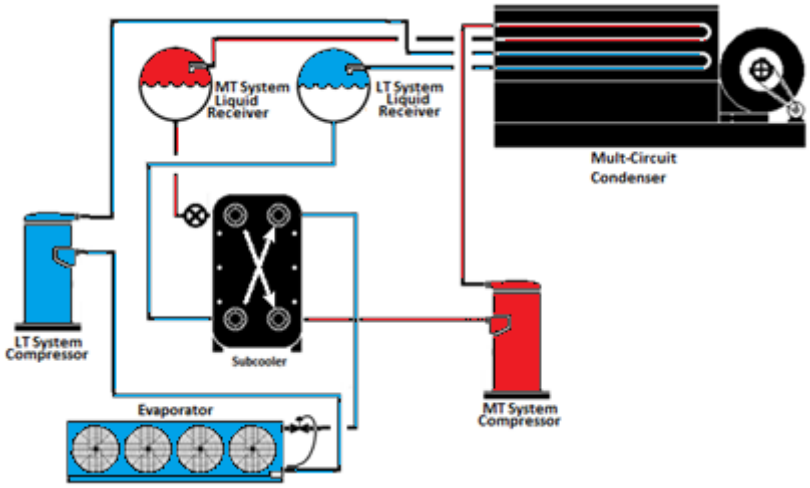

Figure 10-19 – Liquid Subcooling Provided By a Separate Medium-Temperature System

Exceptions to the liquid subcooling requirements are:

1. Low temperature cascade systems that condense into another refrigeration system rather than condensing to ambient temperature
2. Existing compressor systems that are reused for an addition or alteration

10.3.4 Refrigerated Display Case Lighting Control Requirements

§120.6(b)3

All lighting in refrigerated display cases, and lights installed on glass doors of walk-in coolers and freezers shall be controlled by either automatic time switch controls and/or motion sensor control. The requirements in this section apply to stores that are open for business for less than 140 hours per week.

Example 10-37

Question

A new store is open for business 24 hours a day but is closed on Sunday. Do the display case lights at this store need to comply with the requirements of the Standards?

Answer

No. This store is open for business 144 hours per week, and is therefore exempt.

Automatic Time Switch Control

Automatic time switch controls shall turn off the lights during non-business hours.

Timed overrides for a display case line-up or walk-in case may be used to turn on the lights for stocking or non-standard business hours. The override must time-out and automatically turn the lights off again in one hour or less. The override control may be enabled manually (e.g. a push button input to the control system) or may be scheduled by the lighting control or energy management system.

Motion Sensor

Motion sensor control can be used to meet this requirement by either dimming or turning off the display case lights when space near the case is vacated. The lighting must dim so that the lighting power reduces to 50% or less. The maximum time delay for the motion sensor must be 30 minutes or less.

10.3.5 Refrigeration Heat Recovery

This section addresses mandatory requirements for the use of heat recovery from refrigeration system(s) to HVAC system(s) for space heating and the charge limitations when implementing heat recovery, including an overview of configurations and design considerations for heat recovery systems. Heat rejected from a refrigeration system is the total of the cooling load taken from display cases and walk-ins in the store plus the electric energy used by the refrigeration compressors. Consequently, there is a natural relationship between the heat available and the heating needed; a store with greater refrigeration loads needs more heat to make up for the cases and walk-ins and also has more heat available.

The heat recovery requirements apply only to space heating.

There are many possible heat recovery design configurations due to the variety of refrigeration systems, HVAC systems and potential arrangement and locations of these systems. A number of examples are presented here but the Standards do not require these configurations to be used. The heat recovery design must be consistent with the other requirements in the Standards such as condenser floating head pressure.

At least 25 percent of the sum of the design Total Heat of Rejection (THR) of all refrigeration systems with individual design Total Heat of Rejection of 150,000 Btu/h or greater must be utilized for space heat recovery.

Exceptions to the above requirements for heat recovery are:

1. Stores located in Climate Zone 15, which is the area around Palm Springs, California. Weather and climate data are available in Joint Appendix JA2 – Reference Weather/Climate Data
2. The above requirements for heat recovery do not apply to the HVAC and refrigeration systems that are reused for an addition or alteration

The Standards also limit the increase in hydrofluorocarbon (HFC) refrigerant charge associated with refrigeration heat recovery. The increase in HFC refrigerant charge associated with refrigeration heat recovery equipment and piping must not be greater than 0.35 lbs. per 1,000 Btuh of heat recovery heating capacity.

Example 10-38

Question

A store has three new distributed refrigeration systems, A, B and C, with design Total Heat of Rejection (THR) of 140,000 Btu/h, 230,000 Btu/h and 410,000 Btu/h, respectively. What is the minimum required amount of refrigeration heat recovery?

Answer

Refrigeration systems B and C have individual design THR of greater than 150,000 Btu/h, whereas refrigeration system A has design THR of less than 150,000 Btu/h. Therefore, the store must have the minimum refrigeration heat recovery equal to 25% of the sum of THR of refrigeration systems B and C only. The minimum required heat recovery is therefore:

$$25\%\ x\ (230{,}000\ Btu/hr + 410{,}000\ Btu/hr) = 160{,}000\ Btu/hr$$

Example 10-39

Question

How should the Total Heat of Rejection be calculated for the purpose of this Section?

Answer

The THR value is equal to the total compressor capacity plus the compressor heat of compression.

Example 10-40

Question

A 35,000 ft2 food store is undergoing an expansion to add 20,000 square feet area. The store refrigeration designer plans to use two existing refrigeration systems with 600,000 Btu/h of design total heat rejection capacity and add a new refrigeration system with a design total heat rejection capacity of 320,000 Btu/h. The store mechanical engineer plans on replacing all the existing HVAC units. Is the store required to have refrigeration heat recovery for space heating?

Answer

Yes. The store must have the minimum required refrigeration heat recovery from the new refrigeration system. The new refrigeration system has a design THR of greater than 150,000 Btu/h threshold. The minimum amount of the refrigeration heat recovery is 25% of the new system THR. The existing refrigeration systems are not required to have the refrigeration heat recovery.

A. Refrigeration Heat Recovery Design Configurations

The designer of heat recovery systems must consider the arrangement of piping, valves, coils, and heat exchangers as applicable to meet the Standards of the code. Numerous refrigeration heat recovery systems configurations are possible depending upon the refrigeration system type, HVAC system type and the store size. Some possible configurations are:

1. Direct heat recovery
2. Indirect heat recovery
3. Water loop heat pump system

These configurations are described in more detail with the following sections.

Direct Heat Recovery

Figure 10-20 shows a series-connected direct condensing heat recovery configuration. In this configuration, the heat recovery coil is placed directly within the HVAC unit airstream (generally the unit serving the main sales area), and the discharge refrigerant vapor from the compressors is routed through the recovery coil and then to the outdoor refrigerant condenser when in heating mode. If two or more refrigeration systems are used for heat recovery, a multi-circuit heat recovery coil could be used.

This configuration is very suitable when the compressor racks are close to the air handling unit that are to be used for heat recovery. If the distance is too far, an alternative design should be considered; the long piping runs may result in a refrigerant charge increase that exceeds the maximum defined in the Standards, or there may be excessive pressure losses in the piping that could negatively affect compressor energy.

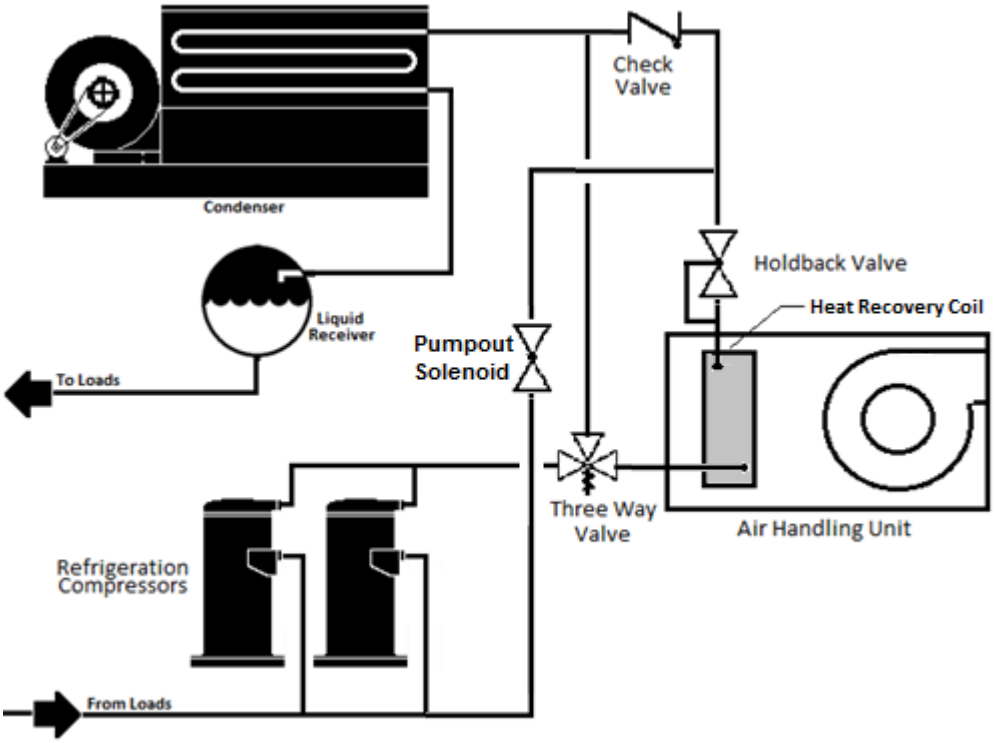

Figure 10-20 – Series Direct Heat Recovery Configuration

Figure 10-21 shows a parallel-connected direct-condensing configuration. In this configuration, the heat recovery coil handles the entire condensing load for the connected refrigeration system(s) when the air handling unit is in heating mode. Reduced refrigerant charge is the primary advantage of this configuration. Since the unused condenser (either the heat recovery condenser or the outdoor condenser) can be pumped out, there is no increase in refrigerant charge. A high degree of design expertise is required with this configuration in that the heat recovery condenser and associated HVAC system must take the entire heating load while operating at reasonable condensing temperatures—in any event, no higher than the system design SCT and in most instances with reasonable design no higher than 95°F-100°F condensing temperature in the heat recovery condenser. Ducting with under case or low return air design is essential in this type of system, in order to obtain cooler entering air and maintain reasonable condensing temperatures. Provision is required for practical factors such as dirty air filters.

Since the main condenser is not in use during heat recovery, the condenser floating head pressure requirements do not apply.

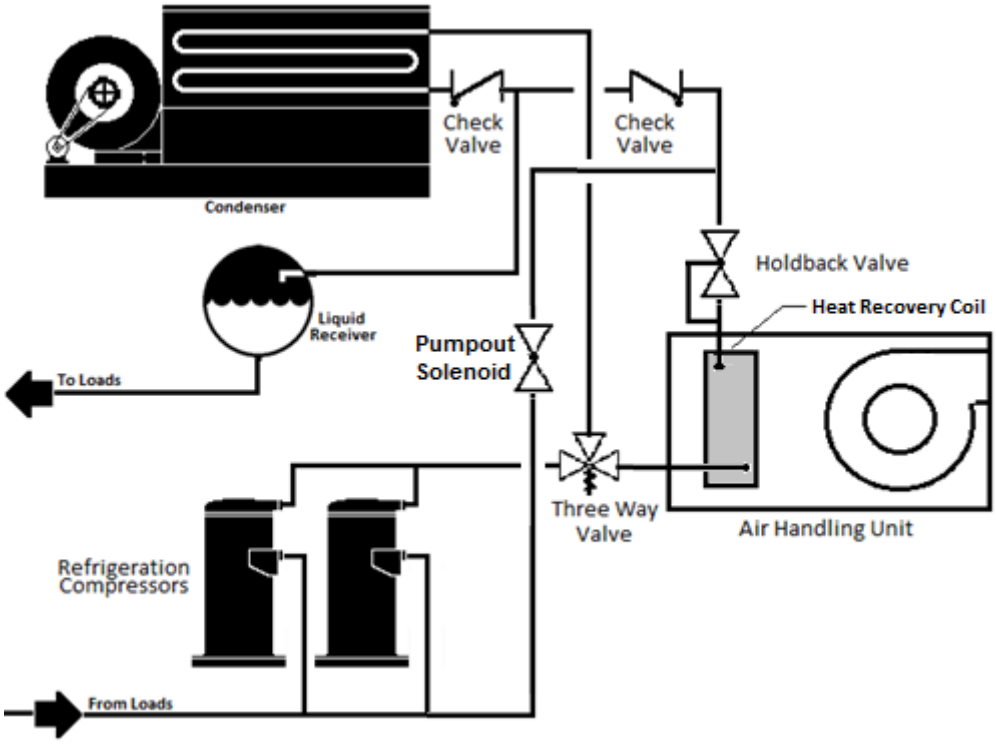

Figure 10-21 – Parallel Direct Condensing Heat Recovery Configuration

Indirect Heat Recovery

Figure 10-22 shows an indirect heat recovery configuration with a fluid loop. In this configuration, the recovered heat is transferred from the refrigerant to an intermediate fluid, normally water or water-glycol, which is circulated through a fluid-to-air heat exchanger located in the air handling unit airstream. Like the direct condensing configuration, discharge refrigerant gas from the compressors is routed through the refrigerant-to-fluid heat exchanger and then to the outdoor refrigerant condenser when in heating mode.

The refrigerant-to-fluid heat exchanger can be located close to the refrigeration system compressors, maximizing the available heat for recover while keeping the

overall refrigerant charge increase low. This configuration is also suitable when multiple HVAC units are employed for the refrigeration heat recovery. Indirect systems must utilize a circulation pump to circulate the fluid between the HVAC unit and the recovery heat exchanger.

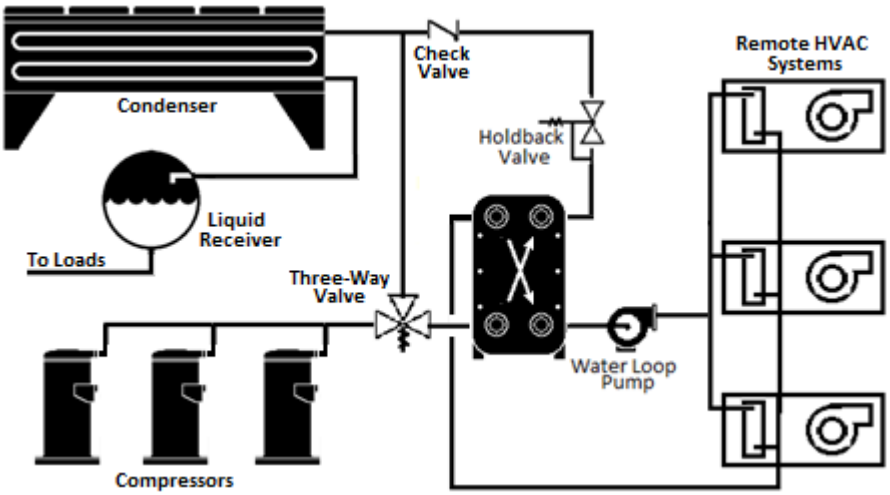

Figure 10-22 – Indirect Heat Recovery with an Indirect Loop

Multiple refrigeration systems can also be connected in parallel or in series, using a common indirect fluid loop. Figure 10-23 shows three refrigeration systems connected in series by a common fluid loop. The temperatures shown are only examples.

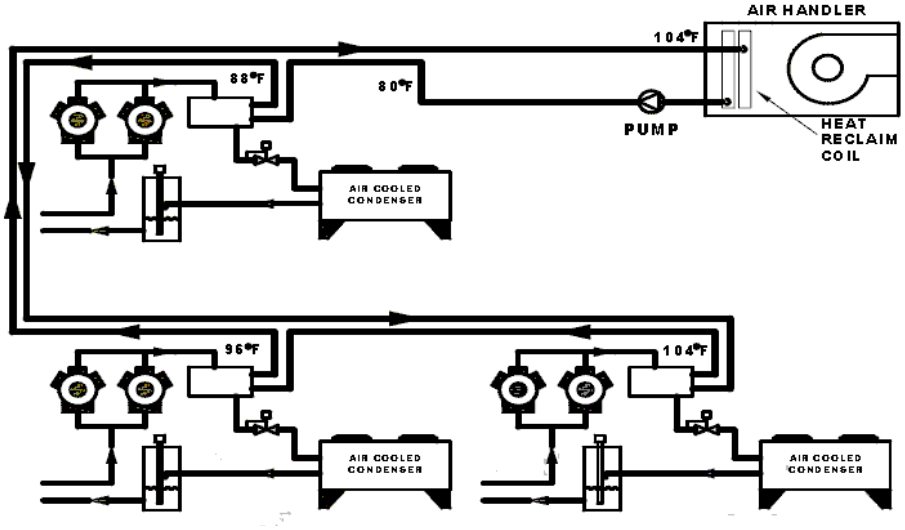

Figure 10-23 – Series-Piped Indirect Water Recovery

This configuration allows the refrigerant-to-water condenser temperature difference (TD) to be kept low at each refrigeration system (e.g. 8°-10°F is possible) while maintaining a sufficiently high water-side TD at the air handling unit (e.g. 20°-25°F depending on specifics) to allow an effective selection of the water-to-air heating coil

vs. the available airflow. This method also minimizes both the required fluid flow and pump power.

B. Control Considerations

Holdback Considerations

For direct and indirect systems, a holdback valve is required to control the refrigerant condensing temperature in the heat recovery coil (for direct systems) or the refrigerant-to-water condenser (for indirect systems) during heat recovery operation. Regulating the refrigerant pressure to achieve condensing recovers the latent heat from the refrigerant. Without condensing, only the sensible heat (i.e. superheat) is obtained, which is only a small fraction of the available heat. Figure 10-24 is a pressure-enthalpy diagram showing the difference in available recovery heat from a refrigeration system with and without a holdback valve.

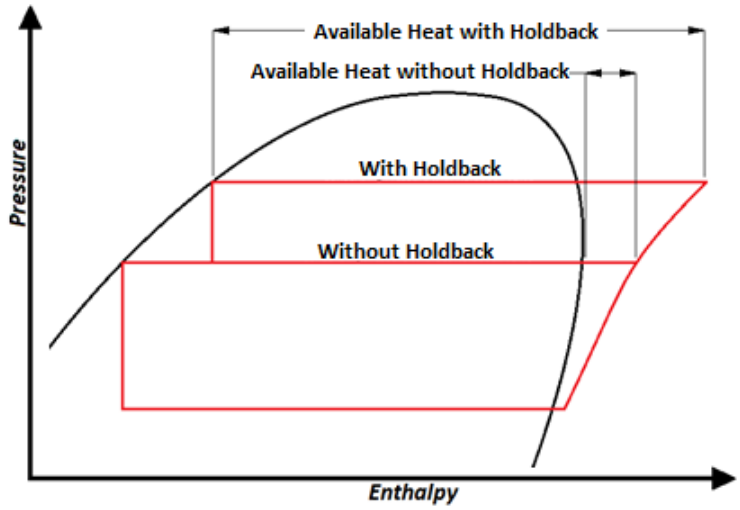

Figure 10-24 – Pressure-Enthalpy Diagram with and without a Holdback Valve

The holdback valve regulates pressure at its inlet, and is located at the exit of the recovery heat exchanger. Figure 10-25 shows a direct-condensing configuration with the proper location of the holdback valve.

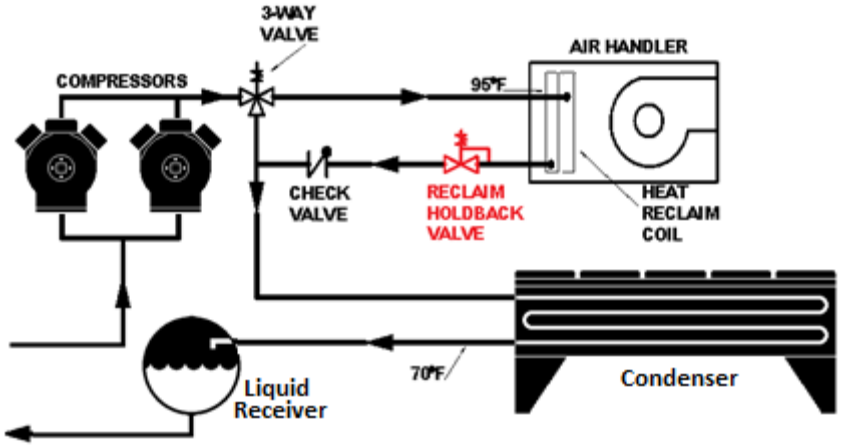

Figure 10-25 – Direct-condensing configuration showing location of holdback valve

A more advanced design uses an electronic holdback valve controlled based on the temperature of the air entering the heat recovery coil. The electronic heat recovery holdback valve controls the valve inlet pressure and thus the heat recovery coil condensing temperature to maintain only the pressure necessary to achieve the required condensing TD (heat recovery SCT less entering air temperature) thereby minimizing compressor efficiency penalty. This is particularly useful when the volume outside air can significantly change the mixed air temperature entering the heat recovery coil. In colder climates, reducing the heat recovery holdback pressure can be important as a means to avoid over-condensing (i.e. subcooling). As shown in the pressure-enthalpy diagram above, there is additional flash gas handled by the condenser (even if the refrigerant fully condenses in the heat recovery coil) which is necessary to maintain piping and condenser velocity and thus minimize the charge in the outdoor condenser.

Other designs can replace the three-way valve with a differential pressure regulator and solenoid valve. Figure 10-26 shows a direct-condensing configuration with an electronic heat recovery holdback valve, solenoid valve, and differential pressure regulator.

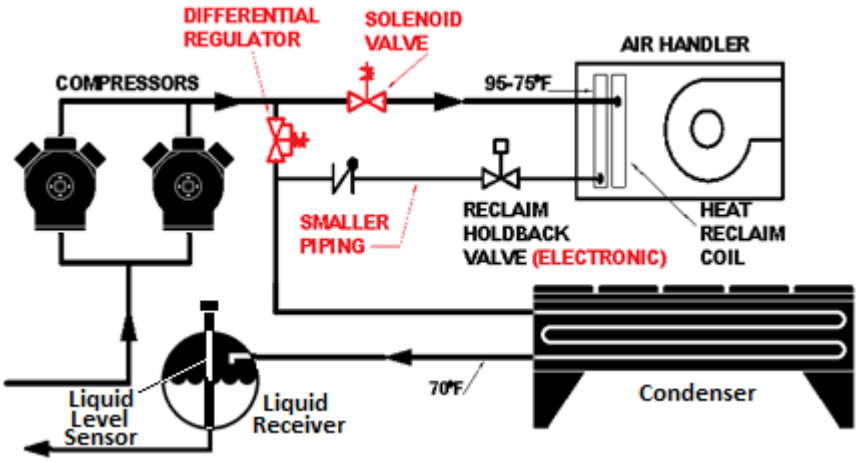

Figure 10-26 – Direct-condensing configuration showing differential regulator, solenoid valve, electronic holdback valve

Heat recovery and Floating Head Pressure

There is typically a tradeoff between heat recovery and refrigeration system efficiency, in that compressor discharge pressure must be increased to provide condensing for heat recovery. If implemented properly, the electric penalty at the refrigeration system compressors is small compared to the heating energy savings.

The Standards require that the minimum condensing temperature at the refrigeration condenser shall be 70°F or less. That means that (in the typical case of series-connected heat recovery) the refrigeration "cycle" still benefits from lower refrigerant liquid temperature, even if the compressor power is somewhat increased during heat recovery. The pressure-enthalpy diagram shown in Figure 10-27 shows the incremental energy penalty at the refrigeration compressors due to the higher discharge pressure required for heat recovery, as well as the lower liquid temperature (and thus improved refrigerant cooling capacity) by floating head pressure at the outdoor condenser.

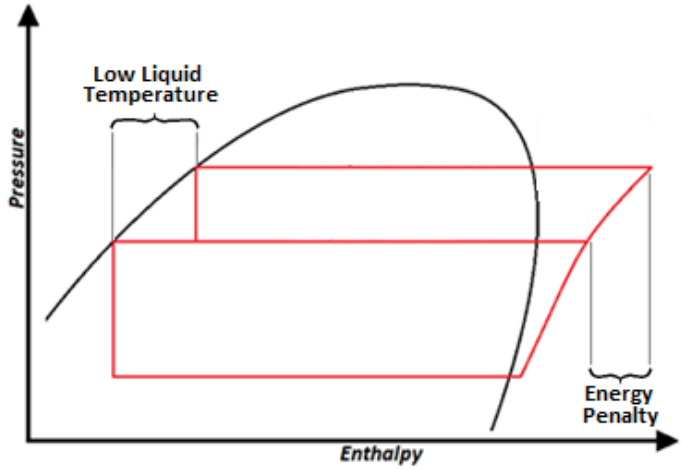

Figure 10-27 – Pressure-enthalpy diagram for heat recovery

C. Recovery Coil Design Considerations

Recovery Coil Sizing Example

Selecting an appropriately-sized heat recovery coil is essential to proper heat recovery system operation. The following example details the process of selecting a right-sized heat recovery coil.

Example 10-41

Question

A supermarket is being constructed that will utilize heat recovery. The refrigeration system selected for recovery has the following parameters:

Design Refrigeration Load: 455.8 MBH
System design SST: 24°F
Representative Compressor Capacity at Design Conditions: 54.2 MBH
Representative Compressor Power at Design Conditions: 5.59 kW

The HVAC system serving the supermarket sales area is a central air handling unit. Heat recovery will be accomplished with a direct-condensing recovery coil inside the air handling unit, downstream of both the return air duct and the outside air damper. The air handling unit has the following design parameters:

Design Air Volume: 25,000 CFM
Design Coil Face Area: 41.7 SQ. FT.

To avoid excessive pressure drop across the recovery coil, the designer will select a coil with a fin density of 10 fins per inch. The heat recovery circuit will use a holdback valve set at 95°F SCT.

What is the procedure for selecting a heat recovery coil?

Answer

To size a heat recovery system, the designer should first establish a design recovery coil capacity by analyzing the refrigeration system from which heat will be recovered. Best practice dictates that the recovery system should be sized to recovery most of the available system total heat of rejection at typical operating conditions, not peak conditions. Since we are designing for average operating conditions, the designer assumes the average refrigeration load is 70% of the design load. Therefore, the average system THR for heating design is:

$$Average\ System\ THR = 70\%\ x\ Design\ Refrigeration\ Load\ x\ THR\ Adjustment\ Factor$$

where:

$$THR\ Adjustment\ Factor = \frac{Representative\ Compressor\ THR}{Representative\ Compressor\ Capacity}$$

and:

$$Rep.Compressor\ THR = Rep.Compressor\ Capacity + Rep.Compressor\ Heat\ of\ Compression$$

Using values from the example:

$$Representative\ Compressor\ THR = 54.2\ MBH + 5.59\ kw\ x\ \left(3.415\frac{MBH}{kW}\right)$$

$$Representative\ Compressor\ THR = 73.3\ MBH$$

Therefore,

$$THR\ Adjustment\ Factor = \frac{73.3\ MBH}{54.2\ MBH}$$

$$THR\ Adjustment\ Factor = 1.35$$

Using the values in this example and the calculated THR Adjustment Factor, the average system THR is:

$$Average\ System\ THR = 70\%\ x\ 455.8\ MBH\ x\ 1.35$$

$$Average\ System\ THR = 430.1\ MBH$$

It is important to note that the recovery system will not be capable of extracting 100% of the total heat of rejection since the condenser operates at a lower pressure and will reject additional heat, even if the heat recovery coil achieves full condensing. In addition, the heat recovery coil performance may often be limited by the available airflow across the coil and the consequent temperature rise vs. the heat being transferred. This performance is determined through evaluation of coil performance, considering entering air temperature, and condensing temperature, as well as the coil design (e.g. rows, fins, air velocity and other factors). Airside pressure drop can be minimized by using a larger face area, requiring lower face velocity and fewer rows.

For in this example, it was assumed that after evaluating coil performance, 85% of the average THR could be recovered with a reasonable coil velocity and coil depth.

$$Available\ Heat\ for\ Reclaim = 85\%\ x\ Average\ System\ THR$$

$$Available\ Heat\ for\ Reclaim = 85\%\ x\ 430.1\ MBH$$

$$Available\ Heat\ for\ Reclaim = 365.6\ MBH$$

The available heat for recovery is the design capacity of the recovery coil we will select for our air handling unit.

Next, the designer needs to know the face velocity of the airstream in the air handling unit. The face velocity is:

$$F.V. = \frac{Design\ CFM}{AHU\ Face\ Area}$$

$$F.V. = \frac{25{,}000\ CFM}{41.7\ ft^2}$$

$$F.V. = 600\ ft/min$$

Finally, the designer needs to know the temperature difference between the condensing temperature (inside the recovery coil) and the temperature of the air entering the recovery coil. Since the coil will be installed in an air handling unit downstream of the outside air damper, the designer assumes that the air entering the coil is a mix of return air from the store and outside air. The designer must determine an appropriate design temperature for the air entering the recovery coil (Entering Air Temperature or EAT) during average heating hours, which is this instance was determined to be 65°F. From the example, the heat recovery system will have a holdback valve setting of 95°F SCT. Therefore, the temperature difference is:

Using the face velocity, design coil capacity, and temperature difference between condensing temperature and entering air temperature, the designer then refers to the air handling unit catalog to select a recovery coil. There the designer find the following two tables:

Heat reclaim correction factor for temperature difference between air and refrigerant.

Temperature Difference (°F)	20	25	30	35	40	45	50	60
Correction Factor	0.4	0.5	0.6	0.7	0.8	0.9	1.0	1.2

Hot Gas Reclaim Heating Capacities
MBH per SQ FT of coil face area

Rows	FPI	Face Velocity (ft/min)		
		500	550	600
2	8	10.9	11.36	11.85
	10	12.15	12.73	13.18
	12	13.13	13.77	14.35
3	8	14.58	15.25	15.9
	10	15.93	16.8	17.63
	12	17.98	18.03	18.95
4	8	17.43	18.47	19.47
	10	18.75	19.92	21.07
	12	19.98	21.25	22.5

The designer enters the first table with the calculated TD of 30°F, finding a correction factor of 0.6. We enter the second table with the value:

Per design requirements, the designer will select a 10 fin-per-inch coil. From the second table, the designer selects the 3-row, 10 fin-per-inch coil for this application.

More commonly, computerized selection tools are used to select heat recovery coils, allowing vendors to provide multiple selections for comparison.

Air-side Integration Considerations

Return Air Location

In supermarkets, ducting return air from behind display cases or near the floor is beneficial in improving comfort by removing the stagnant cool air that naturally occurs due to product refrigeration cases. This approach also increases the effectiveness of refrigeration heat recovery by increasing the temperature difference between the

return air temperature and the refrigerant condensing temperature in the heat recovery coil. Figure 10-28 shows the location of an HVAC return air duct positioned to scavenge cool air from the floor level near refrigerated display cases.

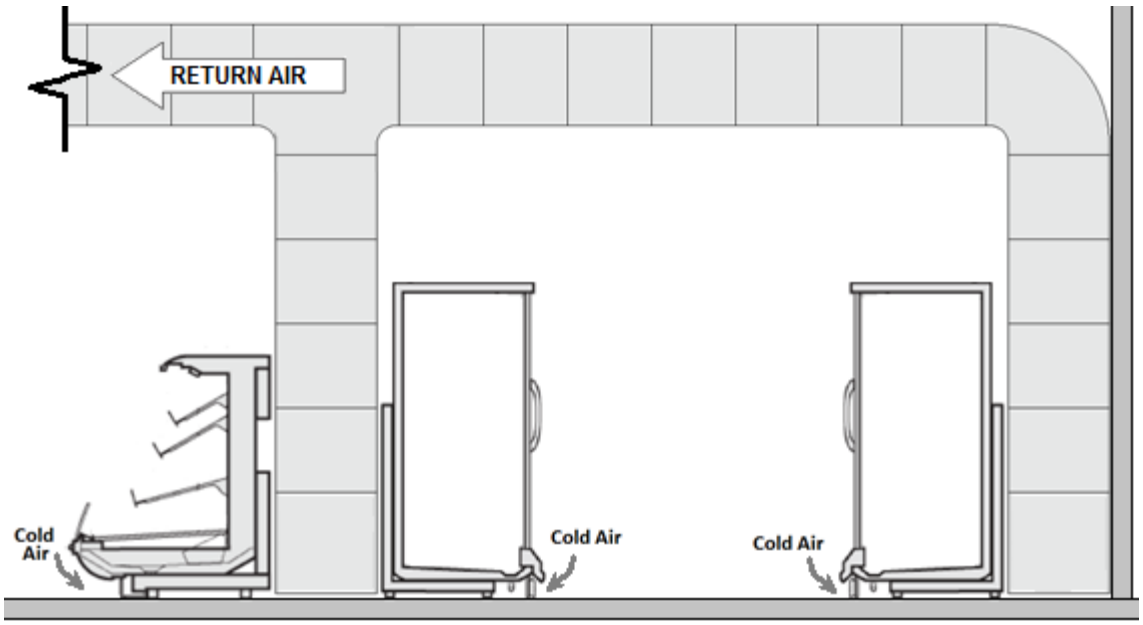

Figure 10-28 – Low Return Air Example

Return Air Duct Configuration

Heat recovery can be incorporated into rooftop HVAC units (RTU) by installing the heat recovery coil inside the RTU cabinet or by installing in the return air duct upstream of the RTU, as shown in Figure 10-29. Location inside the RTU is preferable when outside air is a substantial part of the heating load, but location in the return air duct is reasonable and can provide greater flexibility in selecting the heat recovery coil (e.g. for low face velocity and pressure drop), particularly when coupled with low return air on units located in the refrigerated space, which predominantly provide heating. The fan design must allow for the additional ductwork and coil pressure drop.

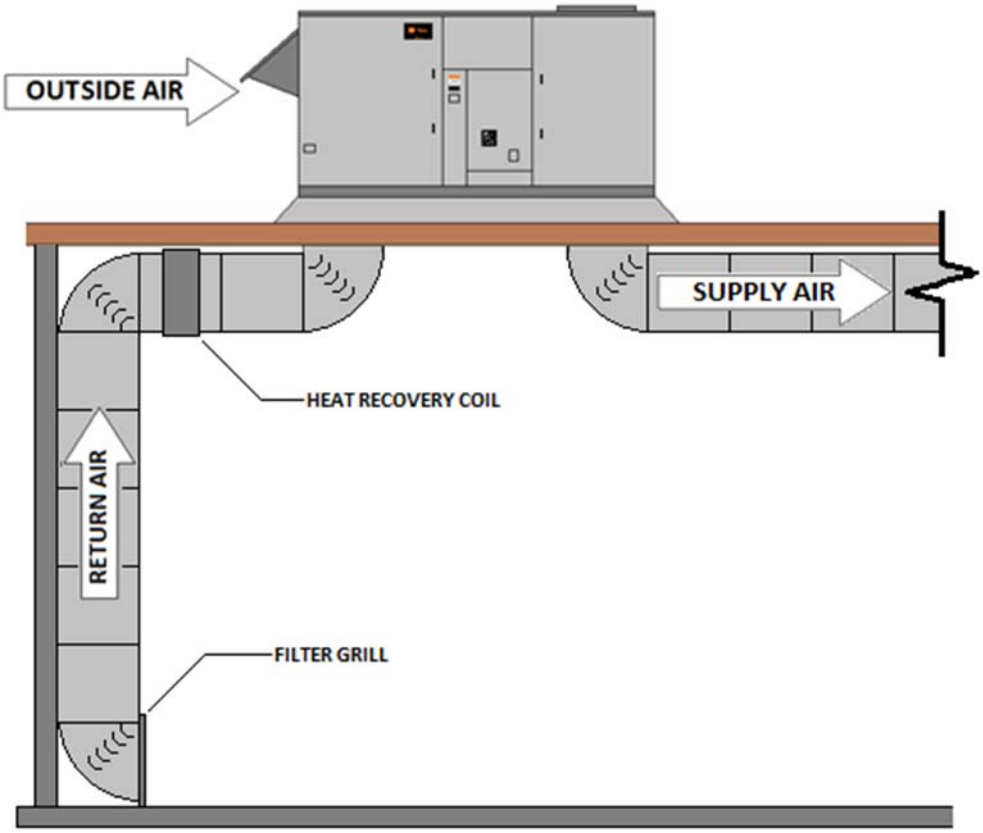

Figure 10-29 – Heat Recovery Coil in Return Air Duct

Transfer Fan Configuration

A ducted transfer system is sometimes employed to remove cold air from aisles with refrigerated display cases (rather than blowing warm air into the refrigerated areas) and can be an easy and appropriate way to utilize heat recovery, particularly from smaller distributed systems. Figure 10-30 depicts a ducted transfer system.

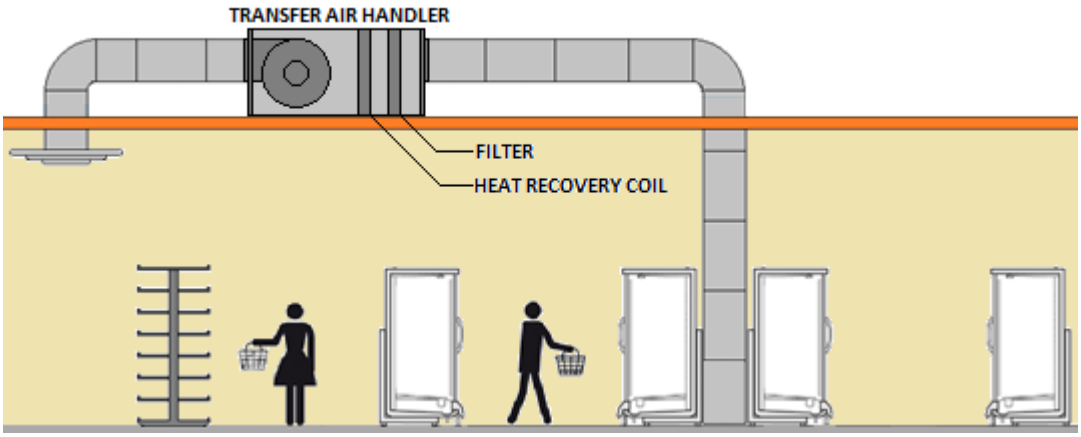

Figure 10-30 – Ducted Transfer System

Calculating Charge Increase

The Standards require that the increase in HFC refrigerant charge from all equipment related to heat recovery for space heating shall be less than 0.35 lbs. for every 1,000 Btuh of heat recovery capacity at design conditions. Refrigerant charge may increase due to the addition of the recovery coil itself (either the refrigerant-to-air heat exchanger for direct configurations, or the refrigerant-to-water heat exchanger for indirect configurations), and the additional piping between the compressor group and the recovery coil. In addition, the refrigerant leaving the recovery coil and entering the refrigerant condenser will be mostly condensed, which increases the charge in the outdoor condenser compared with normal operation. Operating the outdoor condenser at lower pressure (i.e. the required floating heat pressure control) vs. the higher setting at the heat recovery coil holdback valve creates pressure drop, flashing of some liquid to vapor and an increase in velocity due to the much larger volume of a pound of vapor vs. a point of liquid refrigerant. Split condenser control, which is very common in cooler climates, can also be used to close-off and pump out half of the outdoor condenser.

It is the responsibility of the system designer to fully understand how the heat recovery system affects overall refrigerant charge.

Example 10-42

Question

A heat recovery system is being designed for a new supermarket. The refrigerant is R-404A. The proposed design is shown below:

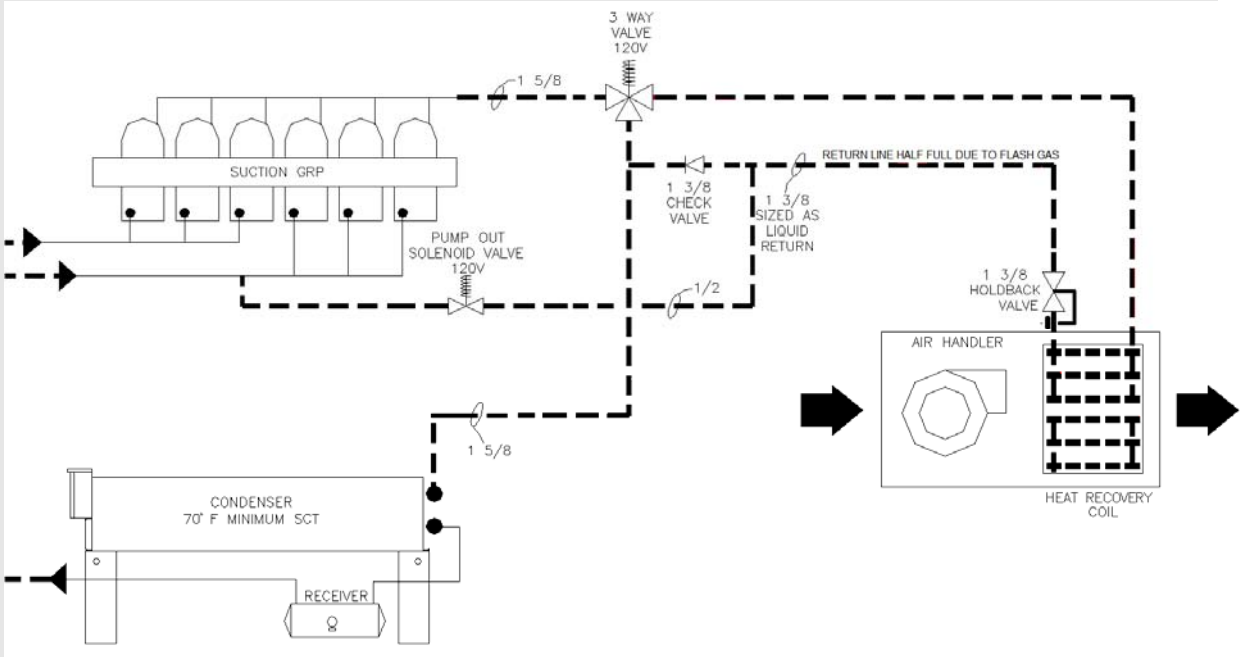

Which piping runs should be included in the calculation of refrigerant charge increase in the proposed design?

Answer

Only the additional piping required to route the refrigerant to the heat recovery coil needs to be considered in this calculation. The piping runs shown in red in the following figure should be included in the calculation of refrigerant charge increase from heat recovery.

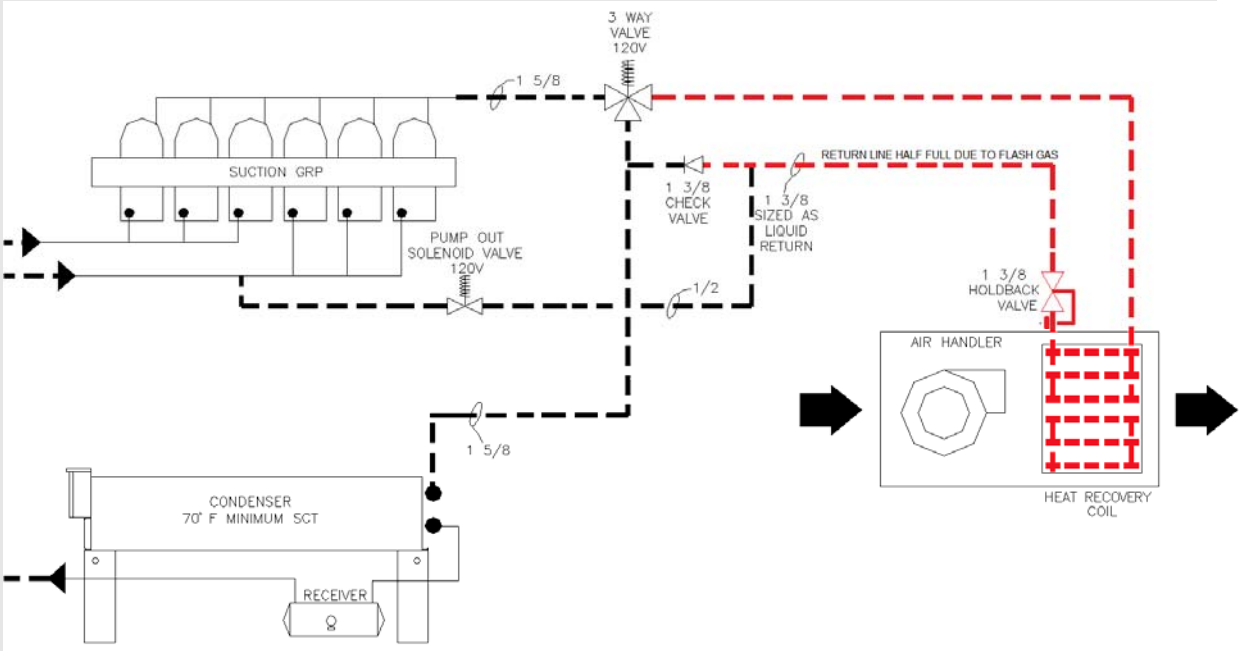

Example 10-43

Question

What is the refrigerant charge size increase in the example described above?

Answer

The system designer prepares the following analysis to calculate the charge size in the refrigerant piping

	Saturation Temperature (°F)	Pipe OD (in)	Pipe ID (in)	Pipe Length (ft)	Line Volume (ft^3)	% Vapor, Liquid by Mass	% Vapor, Liquid by Volume	Refrigerant Charge (lbs)
Discharge Line to Reclaim Coil	95	1 5/8	1 1/2	100	1.2	100%, 0%	100%, 0%	6.7
Liquid/Vapor Return Line	80	1 3/8	1 1/4	100	0.9	9%, 91%	59%, 41%	25.5
							Total Charge:	32.2

The outdoor condenser has a capacity of 350 MBH at a TD of 10°F. Using manufacturers published data, the designer determines that the condenser normal operating charge (without heat recovery) is 26.9 lbs. To calculate the charge increase in the condenser due to heat reclaim, the designer estimates the condenser could be as much as 75% full of liquid, resulting in a condenser charge of 68.8 lbs. with heat recovery.

The heat recovery coil has a capacity of 320 MBH at a design TD of 20°F. The system designer uses manufacturer's documentation to determine that the heat recovery coil refrigerant charge is 14.1 lbs.

The total refrigerant charge with heat recovery is:

$$32.2\ lbs\ (piping) + 68.8\ lbs\ (system\ condenser) + 14.1\ lbs\ (recovery\ coil) = 115.1\ lbs$$

Therefore, the refrigerant charge increase with heat recovery is:

$$115.1\ lbs - 26.9\ lbs = 88.2\ lbs$$

Example 10-44

Question

In the example above, does the recovery design comply with the requirement in the Standards that the recovery design shall utilize at least 25% of the design Total Heat of Rejection (THR) of the refrigeration system?

Answer

The system designer determines that the total THR of all the refrigeration systems in the new supermarket is 800 MBH. From the previous example, the heat recovery capacity is 320 MBH.

$$\frac{320\ MBH}{800\ MBH}\ x\ 100\% = 40\%$$

Therefore, the design is in compliance with the Standards.

Example 10-45

Question

In the example above, does the recovery design comply with the requirement in the Standards that the recovery design shall not increase the refrigerant charge size by more than 0.35 lbs. of refrigerant per 1,000 Btuh of recovery capacity?

Answer

From the previous example, the recovery capacity is 320 MBH at design conditions, and the total refrigerant charge size increase is 88.2 lbs.

$$\frac{88.2\ lbs}{(320\ MBH\ )} = 0.28\ lbs/Btuh$$

Since the refrigerant charge increases by less than 0.35 lbs./MBH, this design is in compliance with the Standards.

D. Water Loop Heat Pump Heat Recovery

Water-source heat pumps (WLHP) can be used for in conjunction with water cooled refrigeration systems, connected to a common water loop as shown in Figure 10-31. Refrigeration systems heat pumps serving various zones of the store reject heat into a water loop, which in turn is rejected to ambient by an evaporative fluid cooler. When the heat pumps are in heating mode, they extract the heat rejected by the refrigeration systems from the water loop. Additional heat, if required, is provided by a boiler connected to the water loop. A significant advantage of this design is low refrigerant charge, since the refrigeration systems use a compact water-cooled condenser, typically with less charge than an air-cooled condenser and no heat recovery condenser is required. Compared with other methods, however, the electric penalty is somewhat higher to utilize the available heat.

The floating pressure requirements in the standard would apply to the fluid coolers, i.e. controls to allow refrigeration systems to float to 70°F SCT and use of wetbulb following control logic.

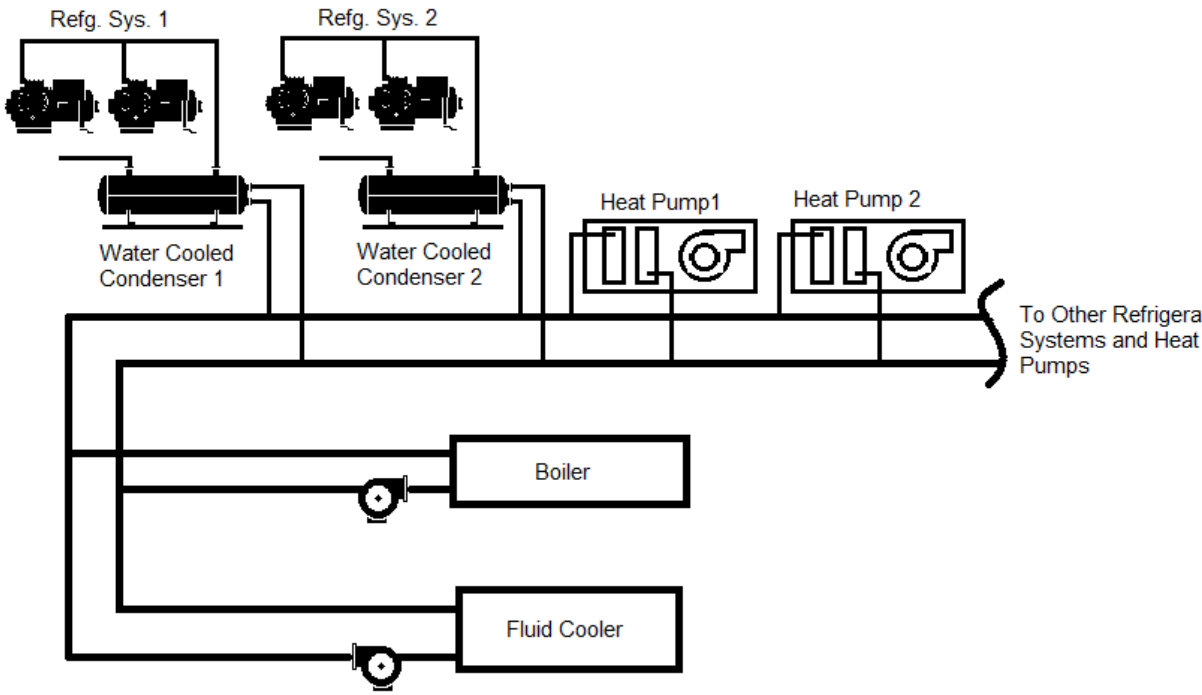

Figure 10-31 – Water Loop Heat Pump Example

10.3.6 Additions and Alterations

§141.1(a)

Requirements related to commercial refrigeration additions and alterations to existing buildings are covered by the Standards in Section §141.1(b). The specific requirements for additions and alterations for Commercial Refrigeration are included in §120.6(b).

10.3.7 Compliance Documentation

Compliance documentation includes the forms, reports and other information that are submitted to the enforcement agency with an application for a building permit (Certificate of Compliance). Compliance documentation also includes documentation completed by the installing contractor, engineer/architect of record, or owner's agent to verify that certain systems and equipment have been correctly installed and commissioned (Installation Certificate).

A. Form CR-1C for Commercial Refrigeration - Certificate of Compliance

CR-1C is the primary form for commercial refrigeration in retail food stores, which provides compliance information for the use of the enforcement agency's field inspectors. This form must be included on the plans. A copy of this form should also be submitted to the enforcement agency along with the rest of the compliance submittal at the time of building permit application. With enforcement agency approval, the applicant may use alternative formats of these forms (rather than the Energy Commission's forms), provided the information is the same and in similar format.

CR-1C (Page 1 of 4): Project Information

Project Description

PROJECT NAME is the title of the project, as shown on the plans and known to the enforcement agency.

CLIMATE ZONE is the California Climate Zone in which the project is located. See Reference Joint Appendix JA2 for a listing of climate zones.

CONDITIONED FLOOR AREA has a specific meaning under the Standards. The number entered here should match the floor area entered on the other forms.

PROJECT ADDRESS is the address of the project as shown on the plans and known to the enforcement agency.

DATE is the last revision date of the plans. If the plans are revised after this date, it may be necessary to re-submit the compliance documentation to reflect the altered design. Note that it is the enforcement agency‘s discretion whether to require new compliance documentation or not.

BUILDING AREA, the checkboxes are used to determine if the retail food store conditioned area is greater than or equal to 8,000 square feet. If the retail food store conditioned area is less than 8,000 square feet then the retail food store need not comply with the Commercial Refrigeration requirements.

PHASE OF CONSTRUCTION indicates the status of the building project described in the compliance documents. Refer to Section 1.7 for detailed discussion of the various choices.

NEW CONSTRUCTION should be checked for all new buildings, newly conditioned space or for new construction in existing buildings (tenant improvements, see Section 1.7.12.) that are submitted for envelope compliance.

ADDITION should be checked for an addition which is not treated as a stand-alone building, but which uses option 2 described in Section 1.7.14. Tenant improvements that increase conditioned floor area and volume are additions.

ALTERATION should be checked for alterations to an existing building mechanical systems (see Section 1.7.13). Tenant improvements are usually alterations.

Documentation Author’s Declaration Statement

The Certificate of Compliance is signed by both the Documentation Author and the Principal Retail Food Store Designer who is responsible for preparation of the plans of building. This latter person is also responsible for the energy compliance documentation, even if the actual work is delegated to a different person acting as Documentation Author. It is necessary that the compliance documentation be consistent with the plans.

DOCUMENTATION AUTHOR is the person who prepared the energy compliance documentation and who signs the Declaration Statement. The person’s telephone number is given to facilitate response to any questions that arise. A Documentation Author may have additional certifications such as an Energy Analyst or a Certified Energy Plans Examiner certification number. Enter number in the EA# or CEPE# box.

Principle Retail Food Store Designer’s Declaration Statement

The Declaration Statement is signed by the person responsible for preparation of the plans for the building. This principal designer is also responsible for the energy compliance documentation, even if the actual work is delegated to someone else (the Documentation Author as described above). It is necessary that the compliance documentation be consistent with the plans. The Business and Professions Code governs who is qualified to prepare plans and therefore to sign this statement. See Section 2.2.2 Permit Application for applicable text from the Business and Professions Code.

Mandatory Commercial Refrigeration Measures Note Block

The person with overall responsibility must ensure that the Mandatory Measures that apply to the project are listed on the plans. The format of the list is left to the discretion of the Principal Retail Food Store Designer. A sample note block is shown below.

Commercial Refrigeration Mandatory Measures

Condensers (§120.6(b)1)
□ All condenser fans for air-cooled condensers, evaporative-cooled condensers, air –or water—cooled fluid coolers or cooling towers shall be continuously variable speed, with the speed of all fans serving a common condenser high side controlled in unison.
□ The refrigeration system condenser controls shall use variable setpoint control logic to reset the condensing temperature setpoint in response to ambient drybulb temperature for systems with air-cooled condensers and ambient wetbulb temperature for systems with evaporative-cooled condensers.
□ The minimum condensing temperature setpoint shall be less than or equal to 70°F.
□ Condenser Specific Efficiency. Air-cooled condensers shall have specific efficiency of at least 65 Btuh/W and evaporative-cooled condenser shall have a specific efficiency of at least 160 Btuh/W.
□ Air-cooled condensers shall have a fin density no greater than 10 fins per inch.
Compressor Systems (§120.6(b)2)
□ Multiple compressor suction groups shall include control systems that use floating suction pressure logic to reset the target saturated suction temperature based on the temperature requirements of the attached refrigeration display cases or walk-ins.
□ Liquid subcooling shall be provided for all low temperature compressor systems with a design cooling capacity equal or greater than 100,000 Btuh with a design saturated suction temperature of -10°F or lower, with the subcooled liquid temperature maintained continuously at 50°F or less at the exit of the subcooler, using compressor economizer port(s) or a separate medium or high temperature suction group operating at a saturated suction temperature of 18°F or higher.
Refrigerated Display Cases (§120.6(b)3)
□ Lighting in refrigerated display cases, and lights on glass doors installed on walk-in coolers and freezers shall be controlled by one of the following: automatic time switch to turn off lights during non-business hours or motion sensor controls that reduce case lighting power by at least 50% within 30 minutes after the area near the case is vacated.
Refrigeration Heat Recovery (§120.6(b)4)

□	HVAC systems shall utilize heat recovery from refrigeration system(s) for space heating, using no less than 25% percent of the sum of the design Total Heat of Rejection of all refrigeration systems that have individual Total Heat of Rejection values of 150,000 Btu/h or greater at design conditions.
□	The increase in hydrofluorocarbon (HFC) refrigerant charge associated with refrigeration heat recovery equipment and piping shall be no greater than 0.35 lbs. per 1,000 Btu/h of heat recovery heating capacity.

CR-1C (Page 2 of 4 through Page 4 of 4): Mandatory Requirements

Pages 2 through 4 of the CR-1C form include the mandatory requirements for Commercial Refrigeration – Condensers, Compressor Systems, Refrigerated Display Cases and Heat Recovery Systems. As stated on these pages, the required information should be either listed on the form or the page from the plans or specifications section and the paragraph displaying the required information should be indicated on the form.

CR-2C (Page 1 of 1): Fan-Powered Condenser Specific Efficiency Worksheet

Form CR-2C (Fan-Powered Condenser Specific Efficiency Worksheet) shall be completed and submitted for retail food stores greater than 8,000 square feet or more when a new condenser is being installed. This form is not required to be on the plans (they may be submitted separately in the energy compliance package), or they may be included on the plans.

10.4 Enclosed Parking Garages

10.4.1 Overview

Garages exhaust systems are sized to dilute the auto exhaust at peak conditions to an acceptable level for human health and safety. EMCS trends of garage CO levels show that in a typical enclosed garage there are only two or three short periods of concern: in the morning when cars enter the garage; during the lunch break when cars enter and leave and at the end of the day. This prescriptive measure requires modulating ventilation airflow in large enclosed parking garages based on pollutant concentrations. By modulating airflow based on need rather than running constant volume, the system will save energy and maintain a safe environment.

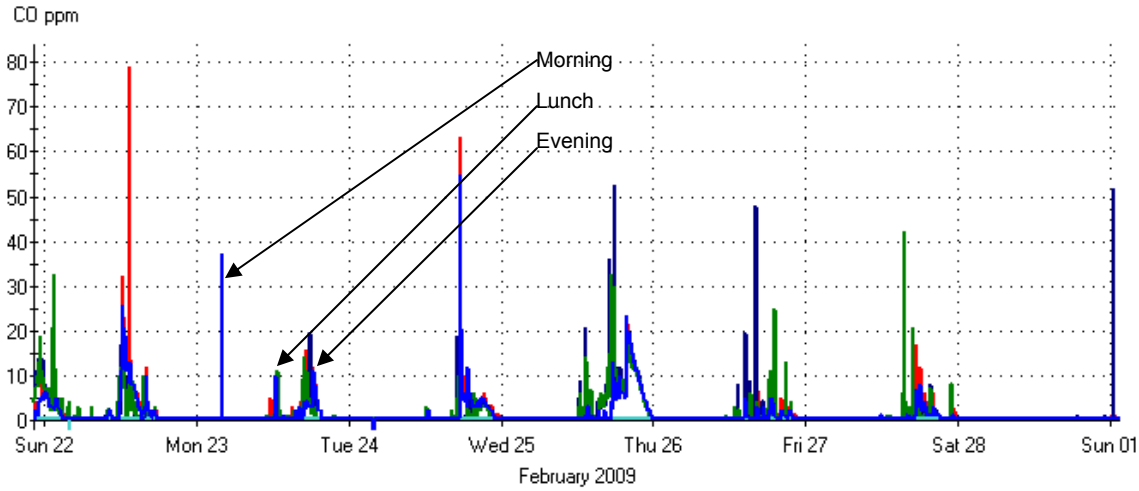

Figure 10-32 – Garage CO Trends

10.4.2 Mandatory Measures

For garage exhaust systems with a total design exhaust rate ≥10,000 cfm, §120.6(c) mandates automatic controls to modulate airflow to ≤50% of design based on measurements of the contaminant levels. This includes:

- Minimum fan power reduction,
- Minimum number and location of CO sensors (or sampling points)
- A CO control setpoint of ≤25 ppm
- A minimum ventilation of ≥0.15 cfm/ft2 whenever the garage is "occupied"
- Controls or design to ensure that the garage is negative with respect to adjacent occupiable areas.
- Minimum performance requirements for the CO sensors, and
- Acceptance testing of the ventilation system per NA7.12.

shall be measured with at least on sensor per 5,000 ft2, each sensor located where the highest concentrations of CO are expected and a minimum of

Reduction of the exhaust fan energy to ≤ 30% of design wattage at 50% of design flow. A two speed or variable speed motor can be used to meet this.

B. Minimum Fan Power Reduction §120.6(c)2

Where required, the fan control must be designed to provide ≤30% of the design fan wattage at 50% of the fan flow. This can be achieved by either a two speed motor or a variable speed drive.

C. CO Sensor Number and Location §120.6(c)3

CO sensors (or sampling points) must be located so that each unique sensor serves an area no more than 5,000 ft2. Furthermore the standard requires a mniimum of two

sensors per "*proximity zone*." A *proximity zone* is defined as areas that are separated by obstructions inculding floors or walls.

The typical design for garage exhaust is to have the exhaust pickups located on the other side of the parking areas from the source of make-up air. The ventilation air sweeps across the parking areas and towards the exhaust drops. Good practice dictates that you'd locate sensors close to the exhaust registers or in dead zones where air is not between the supply and exhaust. Separate floor and rooms separated by walls should be treated as separate proximity zones.

D. CO Sensor Minimum Requirements §120.6(c)3

To comply each sensor must meet all of the following requirements:

- Certified by the manufacturer to be accurate to +/- 5% with less than 5% drift per year.
- Be factory calibrated
- Be monitored by the control system for faults:
    - Alarm if any sensor (or sensing zone) is more than 15 ppm above or below the average of all zones form more than 4 hours.
    - Alarm if during unoccupied periods if the reading of sensors in the same proximity zone differ by more than 15 ppm using 30 minute rolling averages.

10.4.3 Prescriptive Measures

There are no prescriptive measures for enclosed garage exhaust.

10.4.4 Additions and Alterations

There are no separate requirements for additions and alterations.

10.4.5 Compliance Documentation

The exhaust system must be tested per NA7.12.

10.5 Process Boilers

10.5.1 Overview

A process boiler is a type of boiler with a capacity (rated maximum input) of 300,000 Btus per hour (Btu/h) or more that serves a process. A process is an activity or treatment that is not related to the space conditioning, service water heating, or ventilating of a building as it relates to human occupancy.

10.5.2 Mandatory Measures (§120.6(d))

A. Combustion Air (§120.6(d)1)

Combustion air positive shut-off shall be provided on all newly installed process boilers as follows:

- All process boilers with an input capacity of 2.5 MMBtu/h (2,500,000 Btu/h) and above, in which the boiler is designed to operate with a non-positive vent static pressure. This is sometimes referred to as natural draft or atmospheric boilers. Forced draft boilers, which rely on a fan to provide the appropriate amount of air into the combustion chamber, are exempt from this requirement.
- All process boilers where one stack serves two or more boilers with a total combined input capacity per stack of 2.5 MMBtu/h (2,500,000 Btu/h). This requirement applies to natural draft and forced draft boilers.

Combustion air positive shut-off is a means of restricting air flow through a boiler combustion chamber during standby periods, used to reduce standby heat loss. A flue damper and a vent damper are two examples of combustion air positive shut-off devices.

Installed dampers can be interlocked with the gas valve so that the damper closes and inhibits air flow through the heat transfer surfaces when the burner has cycled off, thus reducing standby losses. Natural draft boilers receive the most benefit from draft dampers because they have less resistance to airflow than forced draft boilers. Forced draft boilers rely on the driving force of the fan to push the combustion gases through an air path that has relatively higher resistance to flow than in a natural draft boiler. Positive shut-off on a forced draft boiler is most important on systems with a tall stack height or multiple boiler systems sharing a common stack.

B. Combustion Air Fans (§120.6(d)2)

Combustion air fans with motors 10 horsepower or larger shall meet one of the following for newly installed boilers:

- A. The fan motor shall be driven by a variable speed drive, or
- B. The fan motor shall include controls that limit the fan motor demand to no more than 30 percent of the total design wattage at 50 percent of design air volume.

Electricity savings result from run time at part-load conditions. As the boiler firing rate decreases, the combustion air fan speed can be decreased.

C. Excess Oxygen ≥5 MMBh to ≤10 MMBh(§120.6(d)3 and 4)

Newly installed process boilers with an input capacity of 5 MMBtu/h (5,000,000 Btu/h) to 10 MMBtu/h (10,000,000 Btu/h) shall maintain excess (stack-gas) oxygen concentrations at less than or equal to 5.0 percent by volume on a dry basis over firing rates of 20 percent to 100 percent. Combustion air volume shall be controlled with respect to firing rate or measured flue gas oxygen concentration. Use of a common gas and combustion air control linkage or jack shaft is prohibited.

One way to meet this requirement is with parallel position control. Boilers mix air with fuel (usually natural gas although sometimes diesel or oil) to supply oxygen during combustion. Stoichiometric combustion is the ideal air/fuel ratio where the mixing proportion is correct, the fuel is completely burned, and the oxygen is entirely consumed. Boilers operate most efficiently when the combustion air flowrate is

slightly higher than the stoichiometric air-fuel ratio. However, common practice almost always relies on excess air to insure complete combustion, avoid unburned fuel and potential explosion, and prevent soot and smoke in the exhaust. Excess air has a penalty, which is increased stack heat loss and reduced combustion efficiency.

Parallel positioning controls optimize the combustion excess air to improve the combustion efficiency of the boiler. It includes individual servo motors allowing the fuel supply valve and the combustion air damper to operate independently of each other. This system relies on preset fuel mapping (i.e., a pre-programmed combustion curve) to establish proper air damper positions (as a function of the fuel valve position) throughout the full range of burner fire rate. Developing the combustion curve is a manual process, performed in the field with a flue-gas analyzer in the exhaust stack, determining the air damper positions as a function of the firing rate/fuel valve position. Depending on type of burner, a more consistent level of excess oxygen can be achieved with parallel position compared to single-point positioning control, since the combustion curve is developed at multiple points (firing rates), typically 10 to 25 points. Parallel positioning controls allow excess air to remain relatively low throughout a burner's firing range. Maintaining low excess air levels at all firing rates provides significant fuel and cost savings while still maintaining a safe margin of excess air to insure complete combustion.

D. Excess Oxygen > 10 MMBh (§120.6(d)4)

Newly installed process boilers with an input capacity greater than 10 MMBtu/h (10,000,000 Btu/h) shall maintain excess (stack-gas) oxygen concentrations at less than or equal to 3.0 percent by volume on a dry basis over firing rates of 20 percent to 100 percent. Combustion air volume shall be controlled with respect to measured flue gas oxygen concentration. Use of a common gas and combustion air control linkage or jack shaft is prohibited.

One way to meet this requirement is with oxygen trim control. This control strategy relies on parallel positioning hardware and software as the basis but takes it a step further to allow operation closer to stoichiometric conditions. Oxygen trim control converts parallel positioning to a closed-loop control configuration with the addition of an exhaust gas analyzer and PID controller. This strategy continuously measures the oxygen content in the flue gas and adjusts the combustion air flow, thus continually tuning the air-fuel mixture.

Detecting and monitoring excess air is easy because oxygen not consumed during combustion is present in the exhaust gases. Detecting and monitoring carbon monoxide assures the air/fuel ratio is not too rich as the excess air is trimmed. Based on the exhaust gas analysis, a controller maintains close to stoichiometric combustion by commanding a servo motor to adjust the combustion air damper and another servo motor to adjust the fuel supply valve.

10.5.3 Prescriptive Measures

There are no prescriptive measures for Process Boilers.

10.6 Compressed Air Systems (§120.6(e))

10.6.1 Overview

§120.6(e) applies to all new compressed air systems with a total installed compressor capacity of ≥25 hp. It also applies to existing compressed air systems that are being altered on the supply side as described below. For alternations there is an exception for systems that include one or more centrifugal compressors.

As described in the following paragraphs, there are 3 main requirements in this section:

- Trim Compressor and Storage (§120.6(e)1)
- Controls (§120.6(e)2), and
- Acceptance (§120.6(e)3)

10.6.2 Mandatory Measures §120.6(e)

E. Trim Compressor and Storage (§120.6(e)1)

This requirement targets the unloading capabilities of a compressed air system. There are two alternate paths to comply with this requirement:

- Using a VSD controlled compressor(s) as the Trim Compressor (§120.6(e)1A)
- Using a compressor or set of compressors as the Trim Compressor (§120.6(e)1B)

Both of these paths aim to reduce the amount of cycling of fixed speed compressors. This can be accomplished with variable speed compressors or use of smaller trim compressors that can provide more efficient operation across the unloading range of the system.

Compliance Option 1: VSD-controlled Trim Compressor (§120.6(e)1A)

In order to avoid control gaps - portions of the compressed air system range with poor performance - it's important have a trim compressor sized to handle the gaps between base compressors. This minimum size is determined with the *Largest Net Capacity Increment* - the biggest step increase between combinations of base compressors.

With equally sized compressors this is fairly intuitive: in a system with two-100 hp (434 acfm) rotary screw compressor system, the largest step increase would be the size of one of the compressors (434 acfm). For systems with uneven compressor sizes, it requires going through the following steps:

a) Determine all combinations of base compressors (including all compressors off).

b) Order these combinations in increasing capacity.

c) Calculate the difference between every adjacent combination.

d) Choose the largest difference.

This largest difference is what must be covered by the trim compressor(s) in order to avoid a control gap.

Example 10-46

Question

Given a system with three base compressors with capacities of 200 acfm (Compressor A), 400 acfm (Compressor B) and 1,000 acfm (Compressor C), what is the *Largest Net Capacity Increment?*

Answer

As shown in the image below there are 8 possible stages of capacity ranging from 0 acfm with no compressors to 1,600 acfm with all three compressors operating. The largest net increment is between stage 4 with compressors A and B operating (200+400=600acfm) to stage 5 with compressor C operating (1,000 acfm)

Combinations of Base Compressors

Base Compressors	
A	200
B	400
C	1000

Capacity	Combination
0	None
200	A
400	B
600	A + B
1000	C
1200	A + C
1400	B + C
1600	A + B + C

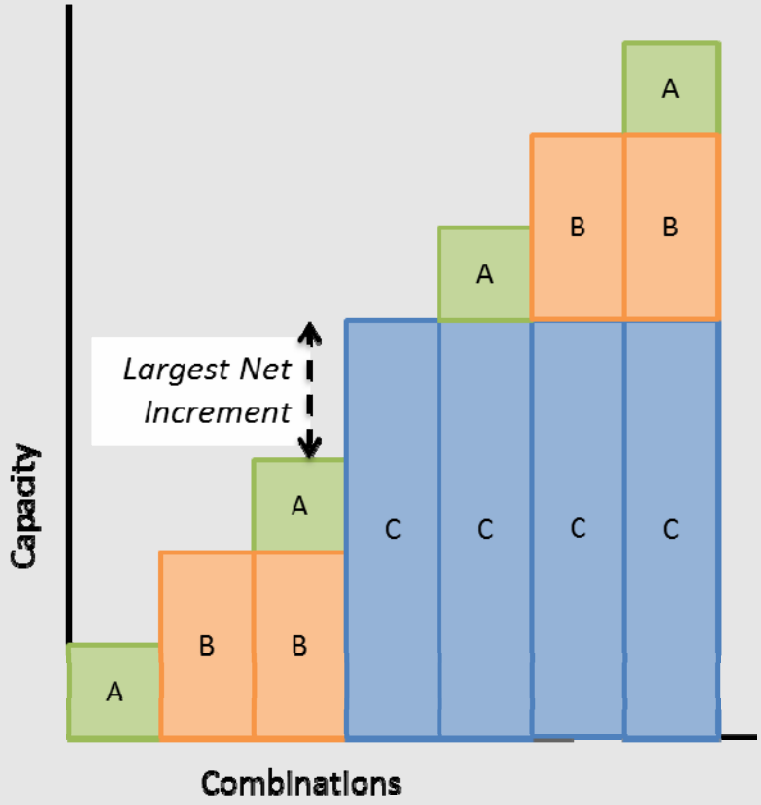

For this system the *Largest Net Capacity Increment* is 1,000 acfm-600 acfm = 400 acfm

Once the *Largest Net Capacity Increment* is calculated, this value can be used to satisfy the first compliance option. Option one mandates that the rated capacity of the VSD compressor(s) be at least 1.25 times the largest net increment.

Example 10-47

Question

Using the system from the previous example, what is the minimum rated capacity of VSD compressor(s) that are needed to comply with Option 1?

Answer

As previously shown, the *Largest Net Capacity Increment* is 1,000 acfm-600 acfm = 400 acfm. The minimum rated capacity for VSD compressor(s) is 400 acfm X 1.25 = 500 acfm.

Compliance Option 2: Other Compressors as Trim Compressor (§120.6(e)1.B)

The second compliance option offers more flexibility but requires looking at both the *Largest Net Capacity Increment* of the system, as well as the *Effective Trim Capacity* of the trim compressor(s).

The *Effective Trim Capacity* is the range across which a trim compressor has adequate part-load performance. Performance is measured in power input over air volume output or specific power (kw/100acfm). Many VSD compressors come with a compressor performance graph in a CAGI data sheet that looks similar to the graph in *Figure **10-33***.

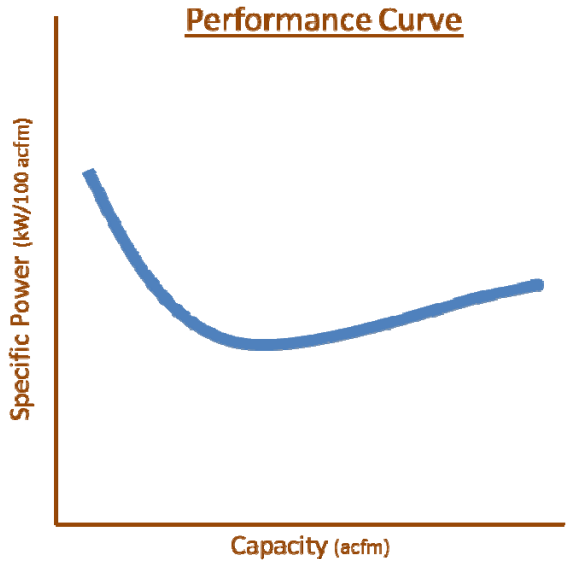

Figure 10-33 –Example Compressor Power vs. Capacity Curve

The capacity of the compressor is along the x-axis, while the power is on the y-axis. The curve in *Figure **10-33*** is a typical shape of a performance curve for a VSD compressor. The lower the specific power, the more energy efficient the compressor is at that condition.

The *Effective Trim Capacity* uses the minimum of the compressor power vs. capacity curve to determine the range of adequate part-load performance. This can be done in the following steps and is illustrated in the graph below.

a) Find the minimum specific power across the range.

b) Find the upper bound by calculating 1.15 times the minimum specific power.

c) Determine the endpoints of the capacity where the specific power is less than or equal to the upper bound.

d) The difference between these two endpoints is the effective trim capacity.

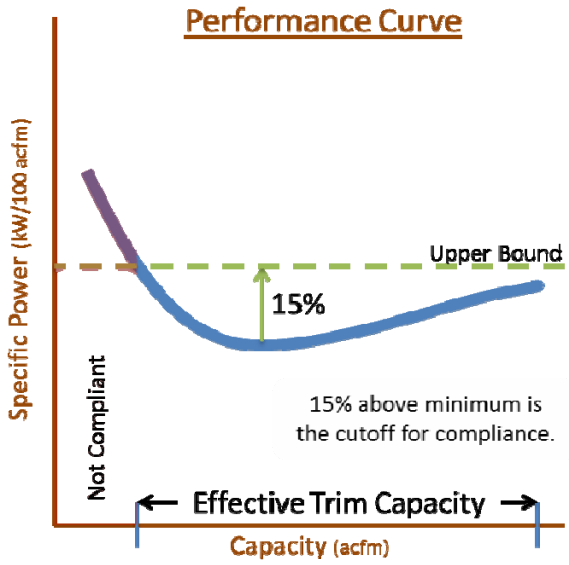

Figure 10-34 –Determination of Effective Trim Capacity from a Compressor Curve

This definition of *Effective Trim Capacity*, along with the *Largest Net Capacity Increment* of the system, will be used to assist in sizing the trim compressor appropriately in the next section.

Example 10-48

Question

Continuing with the system from the previous examples, what is the required minimum *Effective Trim Capacity* of the trim compressor(s) to comply with Option 2?

Answer

As previously shown, the *Largest Net Capacity Increment* is 1,000 acfm-600 acfm = 400 acfm. Per §120.6(e)1he minimum *Effective Trim Capacity* is equal to the *Largest Net Capacity Increment* or 400 acfm.

Example 10-49

Question

A manufacturer provided the following data for their compressor, would this provide the minimum *Effective Trim Capacity* for this system to comply with Option 2?

Input Power (kW)	Capacity (acfm)[a,d]	Specific Power (kW/100 acfm)[d]
20.7	81.0	25.56
32.4	156.0	20.77
47.5	250.0	19.00
62.7	342.0	18.33
79.0	434.0	18.20
94.2	516.0	18.26
104.3	567.0	18.40
114.2	603.0	18.94

Answer

From the manufacturer's data the minimum specific power is 18.2 kW/100 acfm. The upper limit would be 18.2 * 1.15 = 20.9 kW/100 acfm. Interpolating from the manufacturer's data this appears to go from 155 acfm to 605 acfm for an Effective Trim Capacity of 605-155= 450 acfm. This is larger than the *Largest Net Capacity Increment* of 400 acfm so this compressor would comply as a trim compressor for this system.

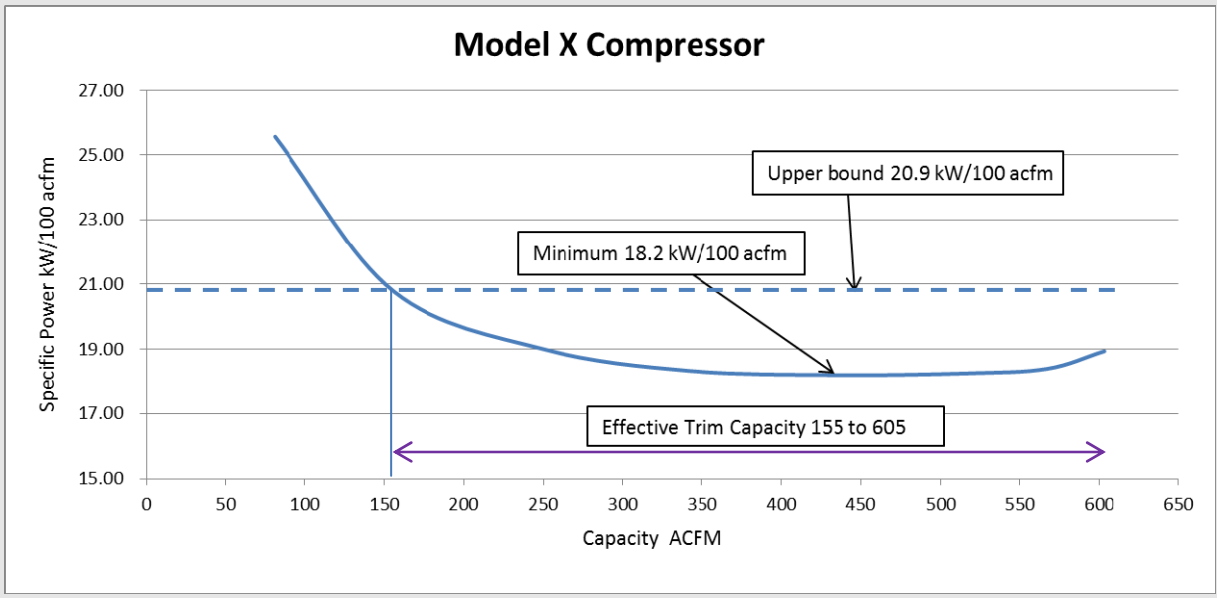

Figure 10-35 –Effective Trim Capacity for Example Compressor

For compliance option 2, the system must include primary storage that has a minimum capacity of 2 gallons for every acfm of capacity of the largest trim compressor.

Example 10-50

Question

What is the required minimum primary storage capacity for the trim compressor from the previous example to comply with Option 2?

Answer

This compressor has a rated capacity of 603 acfm, per §120.6(e)1B it must have 2 gallons of storage per acfm of rated capacity or 603*2 = 1,206 gallons of storage.

F. Controls (§120.6(e)2)

This requirement applies to new and existing facilities that are being altered with ≥100 hp of installed compressor capacity. The section requires an automated control system which will optimally stage the compressors to minimize energy for the given load. With new systems, this ideally means that at any given load, the only compressors running at part-load are the trim compressors. Because not all systems are required to upgrade the trim compressor, the installed controls must stage the compressors in the most efficient manner.

This requirement also mandates the measurement of air demand. The control system must be able to measure or calculate the current system demand (in terms of actual cubic feet per minute of airflow). There are a variety of ways to accomplish this, including but not limited to the following sensors:

- A flow meter
- Pressure transducers, or
- A combination of pressure transducers and power meters

G. Acceptance (§120.6(e)2)

New systems and altered systems must be tested per NA7.13

10.6.3 Prescriptive Measures §140.9

There are no prescriptive measures for compressed air systems

10.6.4 Additions and Alterations

These requirements apply to existing systems which are being altered and which have a total compressor capacity of ≥25 hp. These requirements will be triggered by replacing a compressor, adding a compressor, or removing a compressor.

10.6.5 Compliance Documentation

10.7 Computer Rooms

10.7.1 Overview

§140.9(a) provides minimum requirements for conditioning of *Computer Rooms*. A *Computer Room* is defined in §100.1 Definitions as " a room whose primary function is to house electronic equipment and that has a design equipment power density exceeding 20 watts/ft^2 of conditioned floor area." All of the requirements in §140.9(a) are Prescriptive.

10.7.2 Mandatory Measures

There are no mandatory measures specific to *Computer Rooms*. The equipment efficiencies in §110.1 and §110.2 apply.

10.7.3 Prescriptive Measures

The following is a summary of the measures in this section:

- Air or water side economizer §140.9(a)1
- Restriction on reheat or recool §140.9(a)2
- Limitations on the type of humidification §140.9(a)3
- Fan power limitations §140.9(a)4
- Variable speed fan control §140.9(a)5, and
- Containment §140.9(a)6

Each of these requirements is elaborated on in the following sections.

A. Economizers §140.9(a)1

This section requires integrated air or water economizer. If an air economizer is used to meet this requirement, it must be designed to provide 100% of the expected system cooling load at outside conditions of 55°F Tdb with a coincident 50°F Twb.

If a water economizer is used to meet the is requirement it muse be capable of providing 100% of the expected system cooling load at outside conditions of 40°F Tdb with a coincident 35°F Twb.

See chapter 4 for a description of integrated air- and water-economizers and implementation details.

There are several exceptions to this requirement:

Exception 1 to §140.9(a)1: Individual *Computer Rooms* with cooling capacity of <5 tons in a building that does not have any economizers. This exception is similar to the 6 ton minimum provided on 140.4(e). The threshold for *Computer Rooms* is lower due to their longer hours of operation.

The analsys for this requirement was performed using a 5 ton AC unit with an air/air heat exchanger. Even with the added cost and efficiency loss of a heat exchanger the energy savings in all of the California climates justified this requirement.

Exception 2 to §140.9(a)1: New cooling systems serving an existing *Computer Room* in an existing building up to a total of 50 tons of new cooling equipment per building. This exception permits addition of new IT equipment to an existing factility that was originally built without any economizers.

This exception recognizes that an existing space with capacity for future expansion may not have been sited or configured to accommodate access to outside air.

Above 50 tons of capacity (~175kW of IT equipment load) you would be forced to either provide economizer cooling or offset the energy loss by going the performance approach. Ways to meet this requirement include:

- Provide the new capacity using a new cooling system that has a complying air or water economizer, or
- If the facility has a chilled water plant install an integrated water-side economizer with a minimum capacity equal to the new *Computer Room* cooling load. Water-side economizers can be added to both air and water cooled chilled water plants.

Exception 3 to §140.9(a)1: New cooling systems serving a new *Computer Room* up to a total of 20 tons of new cooling load in an existing building.

This is similar to the previous exception but now you have the option to plan the new space in a location where you can employ a system with an integrated economizer.

Exception 4 to §140.9(a)1: Applies to *Computer Rooms* in a larger building with a central air handling system with a complying air-side economizer that can fully condition the *Computer Rooms* on weekends and evenings when the other building loads are off. This exception allows the *Computer Rooms* to be served by fan-coils or split system DX units as long as the following conditions are met:

- The economizer system on the central air handling unit is sized sufficiently that all of the *Computer Rooms* are less than 50% of it's total airflow capacity.
- The central air handling unit is configured to serve only the *Computer Rooms* if all of the other loads are unoccupied. And,
- The supplemental cooling systems for the *Computer Rooms* are locked out when the outside air drybulb temperature is below 60°F and the non-*Computer Room* zones are less than 50% of the design airflow.

Example 10-51

Question

A new data center is built with a total *Computer Room* load of 1,500 tons of capacity. If the *Computer Rooms* are all served using recirculating chilled water *Computer Room* air-handling units (CRAHs) in in-row air handling units (IRAHs) would this data center meet the requirements of §140.9(a)1 if the chilled water plant had a water side economizer that complied with the requirements of §140.4(e)?

Answer

Not necessarily. The requirements for water-side economizers in §140.4(e) for non-process spaces are different from those in 140.9(a)1 for *Computer Rooms*. Both require integrated operation. The capacity of the water side economizer in §140.4(e) is based on 1,500 tons at a condition of 50°F dry-bulb and 45°F wet-bulb. To meet the requirements of §140.9(a)1, the plant would need to have a capacity of 1,500 tons at a condition of 40°F dry-bulb and 35°F wet-bulb. The design conditions in §140.9(a) would likely require larger heat exchanger and cooling towers than the conditions in §140.4(e) for non-process spaces.

Example 10-52

Question

A new data center is built with chilled water CRAH units sized to provide 100% of the cooling for the IT equipment. The buildling also has louvered walls that can open to bring in outside air and fans on the roof that can exhaust air. Does this design meet the requirements of §140.9(a)1?

Answer

Yes provided that all of the following are true:

- The economizer system moves sufficient air so that it can fully satisfy the design IT equipment loads with the CRAH units turned off and the outside air dry-bulb temperature at 55°F. And,
- The control system provides integrated operation so that the chilled water coils in the CRAH units are staged down when cool outside air is brought into the data center. And,
- The economizer system is provided with a high limit switch that complies with §140.4(e). Although fixed dry-bulb switches are allowed in §140.4(e) they are not recommend in this application as the setpoints were based on office occupancies. A differential dry-bulb switch would provide much larger energy savings.

Example 10-53

Question

A new office building has a house air system with an air-side economizer that complies with §140.4(3). This building has two IDF rooms with split system DX units one is 4 tons of capacity and the other is 7-1/2 tons of capacity. Do the IDF rooms meet the requirements of the Standard?

Answer

Not necessarily. The 4 ton IDF room is fine per Exception 1 to §140.9(a)1. The 7.5 ton IDF room would either need an economizer or a VAV box off of the house air system that was sized for 100% of it's load and met all of the critiera of Exception 4 to §140.9(a)1. Although it is not required this would be recommended for the smaller IDF room as well as it would likely have a very short payback.

Example 10-54

Question

A new data center employs rear door heat exchangers that are cooled entire with water that comes from a closed circuit fluid cooler. Does this design meet the economizer requirements of §140.9(a)1?

Answer

Yes. The standard definition for *Economizer* (both air and water) both have the phrase " to reduce or eliminate the need for *Mechanical Cooling*." In turn, the definition of *Mechanical Cooling* is " lowering the temperature within a space using refrigerant compressors or absorbers, desiccant dehumidifiers, or other systems that require energy from depletable sources to directly condition the space." Since this system does not use compressors it complies.

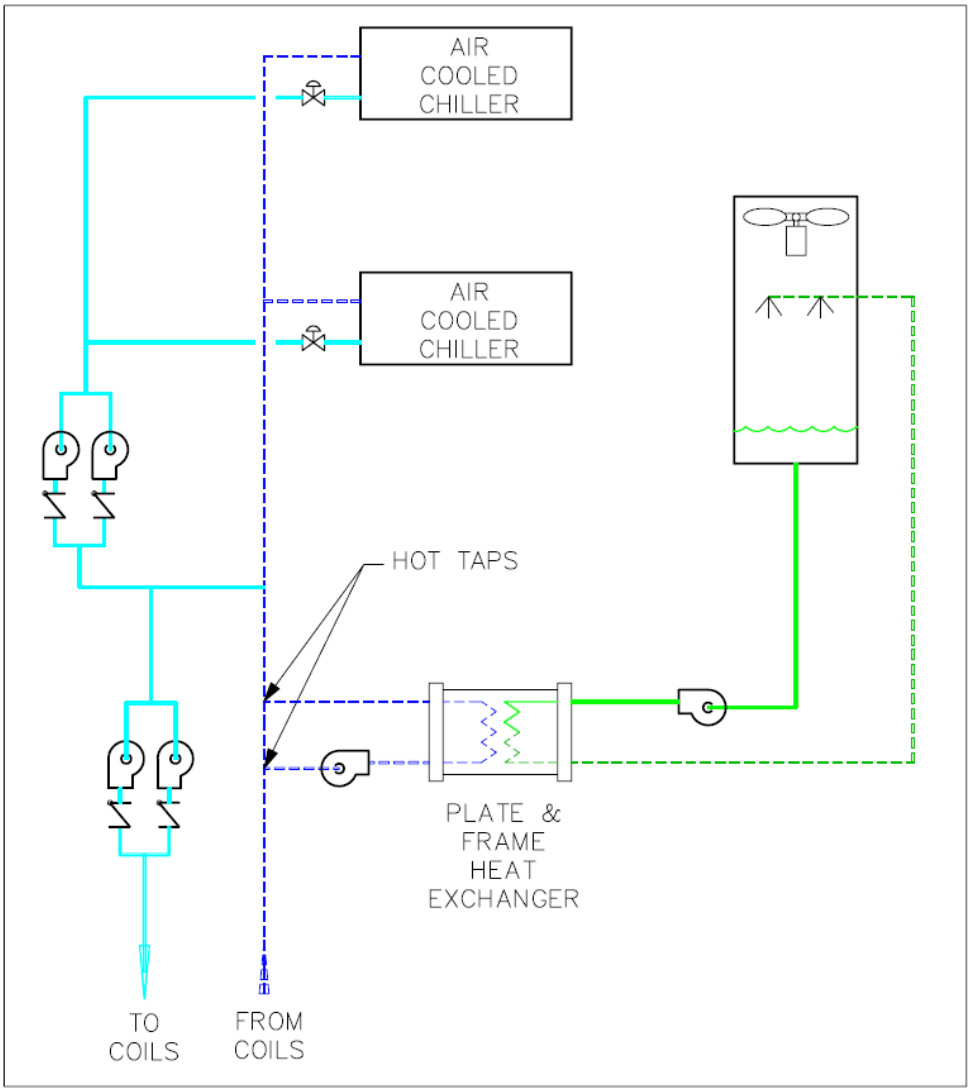

Figure 10-36 –Example of water-side economizer retrofit on a chilled water plant with air-cooled chillers

B. Reheat/Recool §140.9(a)2

§140.9(a)2 prohibits reheating, recooling or simultaneous heating or cooling in *Computer Rooms*. In addition the definition of cooling includes both *Mechanical Cooling* and *Economizers.* This provision is to prohibit use of CRAC and CRAH units with humidity controls that include reheat coils.

C. Humidification §140.9(a)3

§140.9(a)3 prohibits th use of non-adiabatic humidification for *Computer Rooms*. The requirement of humidity control in *Computer Rooms* is controversial. On the low humidity side humidification was provided to reduce the risk of electrostatic discharge. On the high humidity side the concern has been CAF formation on the circuit boards. For both of these issues there is insufficient evidence that the risks either adequately address through the use of humidity controls. The telecommunications industry Standard for central office facilities has no restrictions on either the low or high humidity limits. Furthermore the Electrostatic Discharge Association (ESDA)

removed humidification as a primary control over electrostatic discharge in electronic manufacturing facilities (ANSI/ESDA Standard 20.20) as it wasn't effective and didn't surplant the need for personel grounding. Title 24 allows for humdification but prohibits the use of non-adiabtic humidifiers including the steam humdifiers and electric humidifiers that rely on boiling water as both of these add cooling load with the humidity. The technologies that meet the adiabatic requirement are direct evaporative cooling and ultrasonic humidifiers.

D. Fan Power and Control §140.9(a)4 & 5

In §140.9(a)4 fan power for equipment cooling computer rooms is limited to 27W/kBtuh of net sensible cooling capacity. Net sensible cooling capacity is the sensible cooling capacity of the coil minus the fan heat.

Fan controls (§140.9(a)5) requires that fans serving *Computer Rooms* must have either variable speed control or two speed motors that provide for a reduction in fan motor power to ≤50% of power at design airflow when the airflow is at 67% of design airflow. This applies to chilled water units of all sizes and DX units with a rated cooling capacity of ≥ 5 tons.

E. Containment §140.9(a)6

Computer Rooms with a design IT equiment load exceeding 175 kW per room are required to have containment to separate the computer equipment inlets and outlets. The requirement can be met using hot-aisle containment, cold aisle containment or in-rack cooling. Exceptions are provided for:

- Expansions of exising *Computer Rooms* that don't already have containment
- Computer racks with a design load of < 1 kW/rack (e.g. network racks). And,
- Equivalent energy performance demonstrated to the AHJ through use of CFD or other analysis tools.

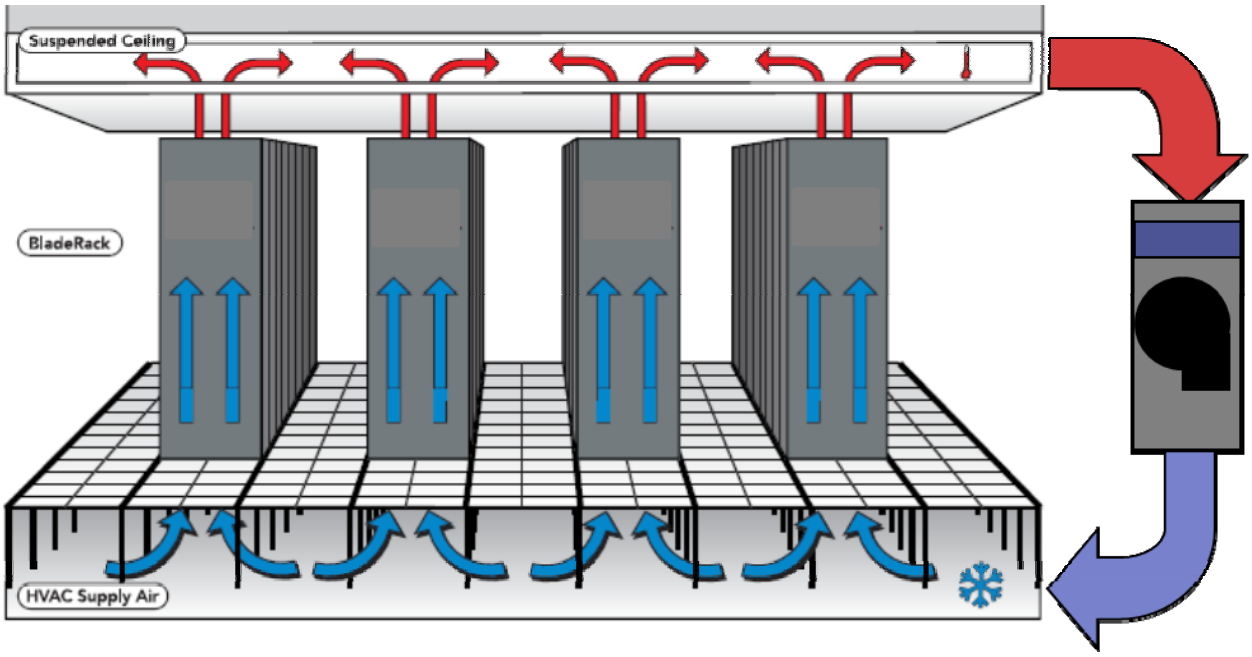

Figure 10-37 –Example of aisle containment using chimney racks

Figure 10-38 – Example of aisle containment using hard partitions and doors

10.7.4 Additions and Alterations

The appliacation to additions and alternations are covered under each measure.

10.7.5 Compliance Documentation

10.8 Commercial Kitchens

10.8.1 Overview

There are four energy saving measures associated with commercial kitchen ventilation. Mechanical systems serving commercial kitchens are not currently regulated by Title 24. The origin of these proposed measures is found in recent amendments to ASHRAE 90.1 titled 90.1ax. Some details of these proposed measures deviate slightly from the measures found in 90.1ax.

The four measures address the following issues:

- Direct Replacement of Exhaust Air Limitations
- Type I Exhaust Hood Airflow Limitations
- Makeup and Transfer Air Requirements
- Commercial Kitchen System Efficiency Options

All four of these are Prescriptive Measures

10.8.2 Mandatory Measures

There are no mandatory measures specific to commercial kitchens. The equipment efficiencies in §110.1 and §110.2 apply.

10.8.3 Prescriptive Measures

A. Kitchen Exhaust Systems §140.9(b)1

This section addresses kitchen exhaust systems. There are two requirements for kitchen exhaust:

- A limitation on use of short-circuit hoods §140.9(b)1A, and
- Maximum exhaust ratings for Type I kitchen hoods §140.9(b)1B

Limitation of Short-Circuit Hoods §140.9(b)1A

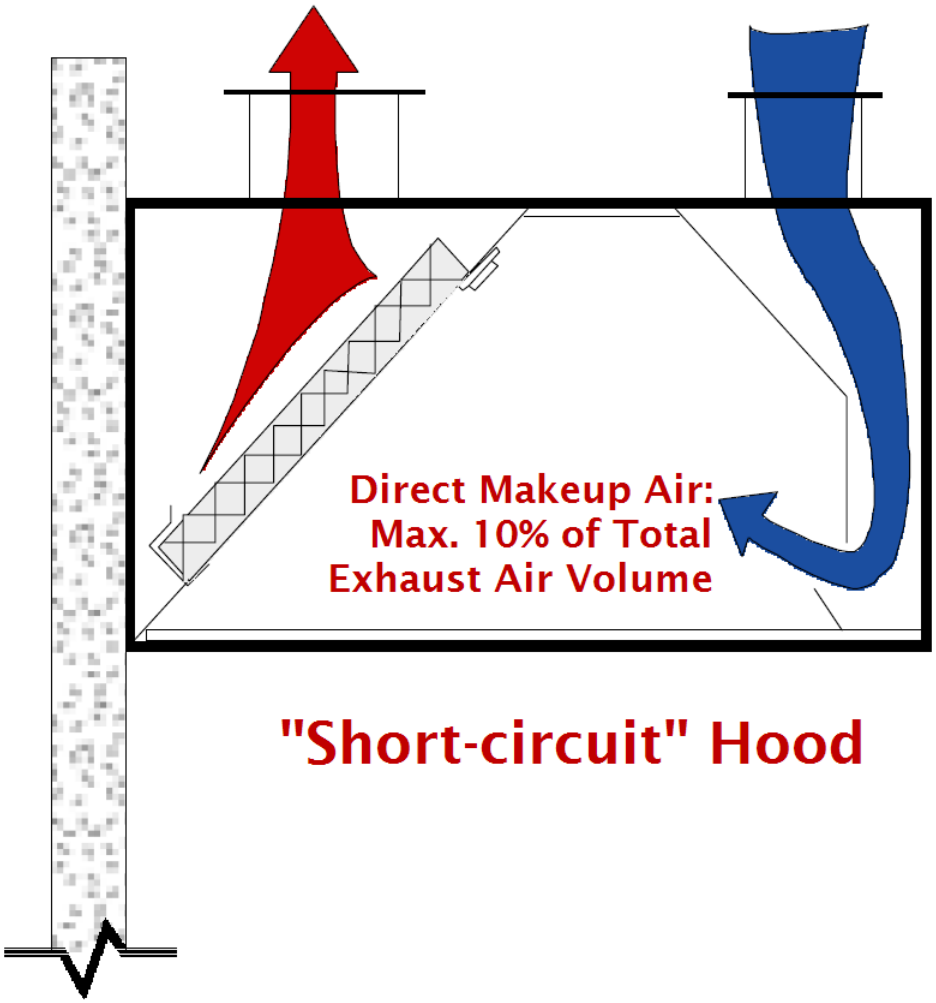

Figure 10-39 –Short-Circuit Hood

Short-circuit hoods are limited to ≤10% replacement air as a percentage of hood exhaust airflow rate. The reasons for this include the following:

Studies by PG&E, the AGA and the CEC have shown direct supply greater than 10% of hood exhaust in short-circuit hoods significantly reduces capture and containment. This on means that it reduces the extraction of cooking heat and smoke from kitchen.

As a result of this poor performance facilities increase the exhaust on these hoods which results in higher fan energy and conditioning of the make-up air.

Maximum Exhaust Ratings for Type I Kitchen Hoods §140.9(b)1B

The standards also limit the amount of exhaust for Type I kitchen hoods based on limits in Table 140.9-A. Similar to the discussion under short-circuit hoods, excessive exhaust increases but fan energy (supply and exhaust) and increase energy for conditioning of the make-up air. These restrictions are triggered where the total exhaust airflow for Type I and II hoods ≥5,000 cfm. There are two exceptions for this requirement:

Exception 1 to 140.9(b)1B: where ≥75% of the total Type I and II exhaust make-up air is transfer air that would otherwise have been exhausted. This exception could be

used when you have a dining area adjacent to the kitchen which would be exhausting air for ventilation purposes even if the hoods weren't running.

Exception 2 to 140.9(b)1B: for existing hoods that aren't being replaced as part of an addition or alteration.

The values in Table 140.9-A are based on the type of hood (left column) and the rating of the equipment that it serves (columns 2 through 5). The values in this table are typically below the minimum airflow rates for unlisted hoods. They are supported by ASHRAE research for use with listed hoods (RP-12002). To comply with this requirement the facility likely have to use listed hoods. The threshold of 5,000 cfm of total exhaust was put in to exempt small restaurants but include larger restaurants and commercial/institutional kitchens.

The definitions for the types of hoods and the duty of cooking equipment are provided in ASHRAE Standard 154-2011.

Table 10-6 – Standard Table 140.9-A Maximum Net Exhaust Flow Rate, cfm per Linear Foot of Hood Length

Type of Hood	Light Duty Equipment	Medium Duty Equipment	Heavy Duty Equipment	Extra Heavy Duty Equipment
Wall-mounted Canopy	140	210	280	385
Single Island	280	350	420	490
Double Island	175	210	280	385
Eyebrow	175	175	Not Allowed	Not Allowed
Backshelf/Pass-over	210	210	280	Not Allowed

B. Kitchen Ventilation §140.9(b)2

This section covers two requirements:

- Limitations to the Amount of Mechanically Heated or Cooled Airflow for Kitchen Hood Make-Up Air §140.9(b)2A
- Additional Efficiency Measures for Large Kitchens §140.9(b)2B

For both of these requirements it is important to know the terms, *Mechanical Heating* and *Mechanical Cooling.* The standard defines *Mechanical Heating* and *Mechanical Cooling* in §100.1 as follows:

> ***Mechanical Cooling*** is lowering the temperature within a space using refrigerant compressors or absorbers, desiccant dehumidifiers, or other systems that require energy from depletable sources to directly condition the space. In nonresidential, high-rise residential, and hotel/motel buildings, cooling of a space by direct or indirect evaporation of water alone is not considered mechanical cooling.
>
> ***Mechanical Heating*** is raising the temperature within a space using electric resistance heaters, fossil fuel burners, heat pumps, or other systems that require energy from depletable sources to directly condition the space.

An important part of the definition for *Mechanical Cooling* is the exclusion of direct and indirect evaporative cooling. The use of evaporative cooling for kitchen hood make-up air is unrestricted.

Limitations to the Amount of Mechanically Heated or Cooled Airflow for Kitchens §140.9(b)2A

This section limits the amount of mechanically cooled or heated airflow to any space with a kitchen hood. The amount of mechanically cooled or heated airflow is limited to the greater of:

- The supply flow required to meet the space heating or cooling load, or
- The hood exhaust minus the available transfer air from adjacent spaces.

The supply flow required to meet the space heating or cooling loads can be directly documented by providing the load calculations.

The calculation of the required make-up air is a little more complex. It requires documenting the "available transfer air" from adjacent spaces which is defined in §140.9(b)2Aii as ," that portion of outdoor ventilation air serving adjacent spaces not required to satisfy other exhaust needs, such as restrooms, not required to maintain pressurization of adjacent spaces, and that would otherwise be relieved from the building." The process to calculate the available transfer air is as follows:

1. Calculate the minimum OSA requirements for the spaces that are adjacent to and open to the kitchen.
2. Subtract the amount of air used by exhaust fans in the adjacent spaces. These include toilet exhaust and any hood exhaust in adjacent spaces.
3. Subtract the amount of air needed for space pressurization.
4. The remaining air is available for transfer to the hoods.

An exception is provided for existing kitchen make-up air units that are not being replaced as part of an addition or alternation.

Example 10-55

Question

What is the available transfer air for the kitchen make up in the scenario shown in the following figure?

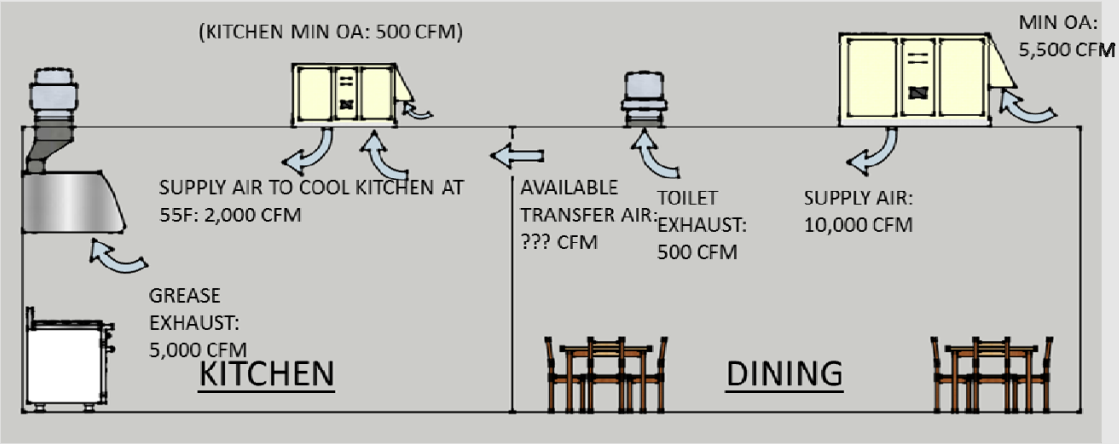

Answer

5,000 cfm calculated as follows.

The OSA supplied to the dining room is 5,500 cfm. From this we subtract 500 cfm for the toilet exhaust and 0 cfm for building pressurization. The remainder 5,500 cfm – 500 cfm – 0 cfm = 5,000 cfm of available transfer air.

Example 10-56

Question

Assuming that this kitchen needs 2,000 cfm of supply air to cool the kitchen with a design supply air temperature of 55°F, would the following design airflow meet the requirements of §140.9(b)2A?

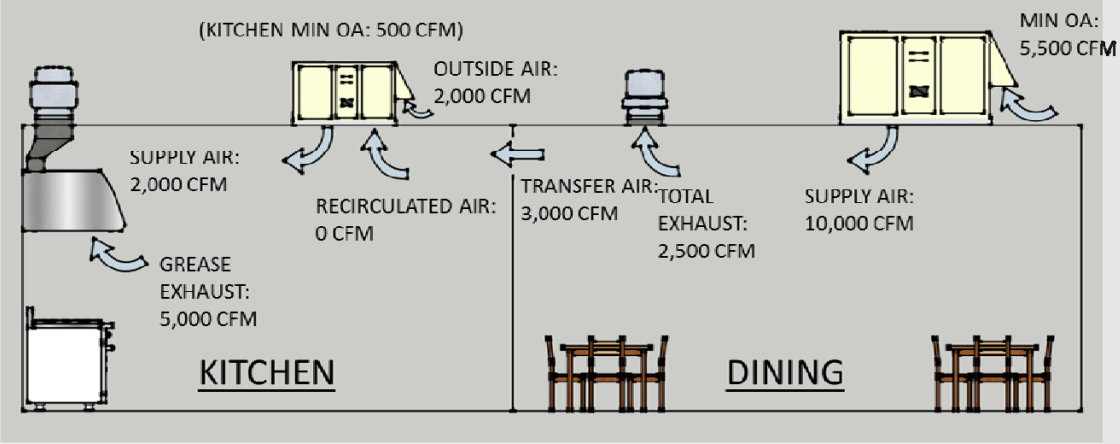

Answer

Yes. This example meets the first provision of §140.9(b)2A. The supply flow reqiured to meet the cooling load is 2,000 cfm. Thus up to 2,000 cfm of mechanically conditioned make up air can be provided to the kitchen. Note that the supply from the make-up air unit, 2,000 cfm, is not as large as the hood exhuast, 5,000 cfm. This means that the remainder of the make-up air, 3,000 cfm, must be transferred from the dining room space.

Although this is allowed under §140.9(b)2Ai, this is not the most efficient way to condition this kitchen as demonstrated in the next example.

Example 10-57

Question

Continuing with the same layout as the previous example, would the following design airflow meet the requirements of §140.9(b)2A?

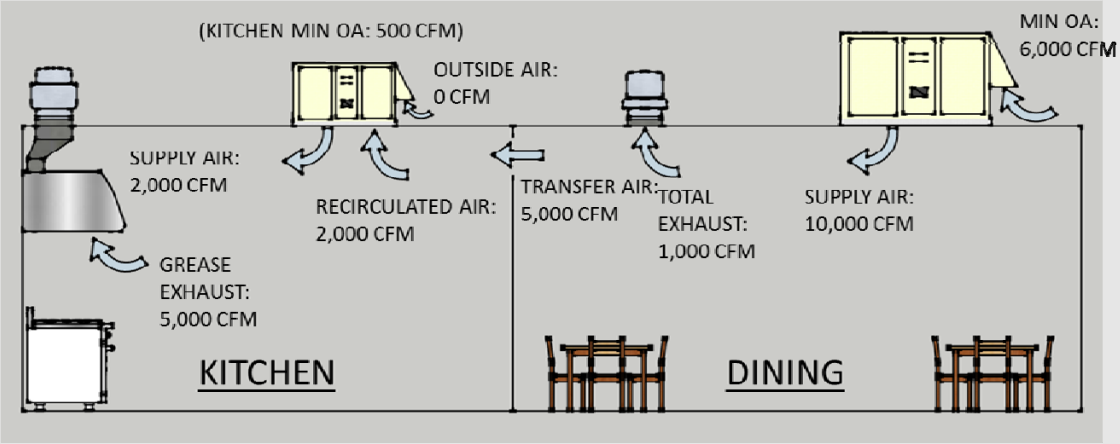

Answer

Yes. In this example 100% of the make-up air, 5,000 cfm, is provided by transfer air from the adjacent dining room. Note that the OSA on the unit serving the dining room has been increased to 6,000 cfm to serve the ventilation for both the dining room and kitchen. Since the dining room has no sources of undesirable contaminants we can ventilate the kitchen with the transfer air.

Comparing this image to the previous example you will see that this design is much more efficient for the following reasons.

- The total outside airflow to be conditioned has been reduced from 7,500 cfm in the previous example (2,000 cfm at the MUA unit and 5,500 cfm at the dining room unit) to 6,000 cfm. And,
- The dining room exhaust fan has dropped from 2,500 cfm to 1,000 cfm reducing both fan energy and first cost of the fan.

Example 10-58

Question

Continuing with the same layout as the previous examples, would the following design airflow meet the requirements of §140.9(b)2A?

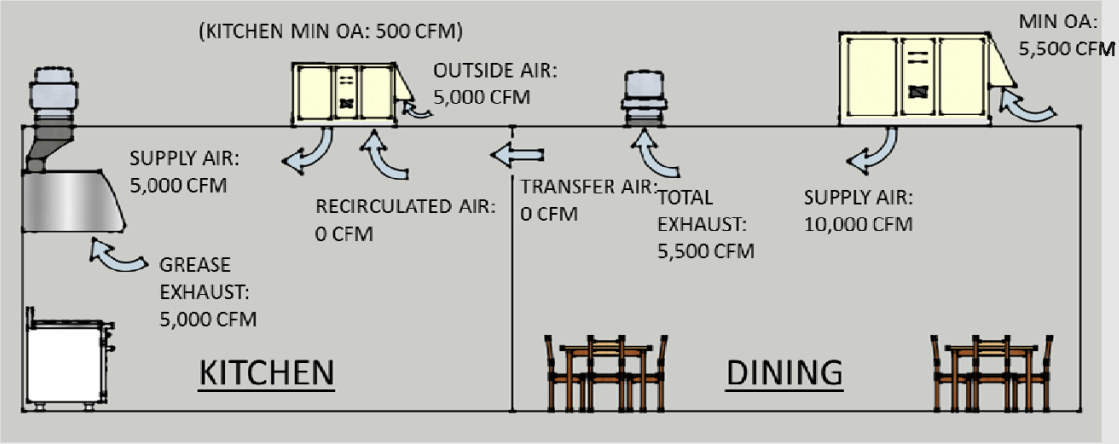

Answer

No if the kitchen unit is mechanically heated or cooled. Per §140.9(b)2A the maximum amount of air that can be mechanically heated or cooled must be less than either:

1. Per §140.9(b)2Ai: 2,000 cfm, the supply needed to cool the kitchen (from Example 10-24)
2. Per §140.9(b)2Aii: 0 cfm, the amount of hood exhaust (5,000 cfm) minus the available transfer air (also 5,000 cfm from Example 10-24).

Additional Efficiency Measures for Large Kitchens §140.9(b)2B

For kitchens or dining facilities that have ≥5,000 cfm of Type I or II hood exhaust, the mechanical system must meet one of the following requirements:

1. Transfer air for make-up ≥50% of the total hood exhaust, or
2. Demand ventilation control on at least 75% of the exhaust air, or
3. Listed energy recovery devices with a sensible heat recovery effectiveness ≥40% on ≥50% of the total exhaust flow, or
4. ≥70% of the make up air volume that is:
    a. Unheated or heated to no more than 60°F, and
    b. Uncooled or cooled without the use of mechanical cooling.

Transfer Air: There is an exception for existing hoods not being replaced as part of an addition or alteration.

The concept of transfer air was addressed in the discussion of §140.9(b)2A above.

Demand Ventilation Control: Per §140.9(b)2Bii Demand ventilation controls must have all of the following characteristics:

- Include controls necessary to modulate airflow in response to appliance operation and to maintain full capture and containment of smoke, effluent and combustion products during cooking and idle; and
- Include failsafe controls that result in full flow upon cooking sensor failure; and
- Include an adjustable timed override to allow occupants the ability to temporarily override the system to full flow; and
- Be capable of reducing exhaust and replacement air system airflow rates to the larger of:
    - 50% of the total design exhaust and replacement air system airflow rates; or
    - The ventilation rate required per Section 120.1.

There are several off the shelf technologies that use smoke detectors that can comply with all of these requirements.

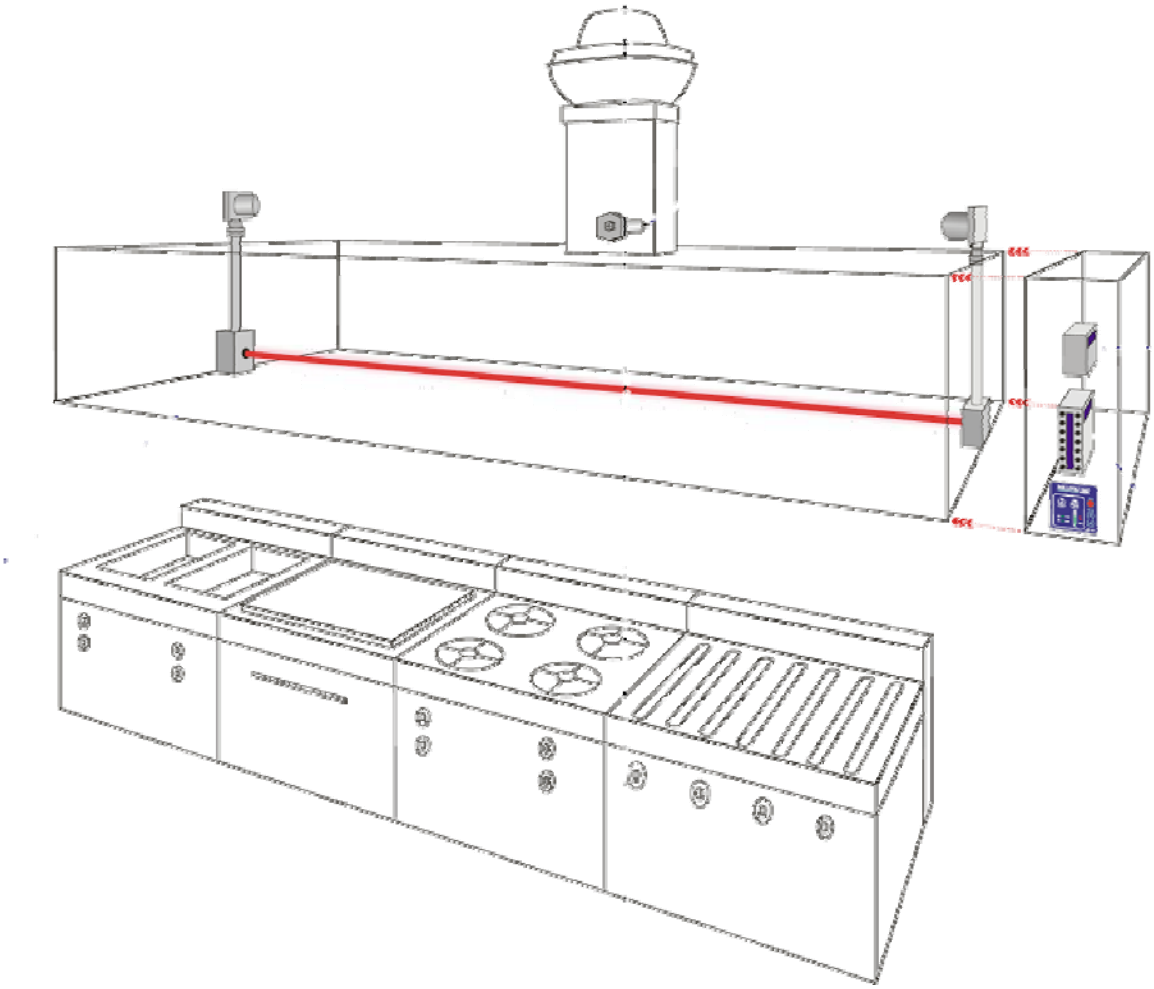

Figure 10-40 –Demand Control Ventilation Using a Beam Smoke Dector

Energy Recovery: Energy recovery is provided using air to air heat exchangers between the unit providing make-up air and the hood exhaust. This option is most effective for extreme climates (either hot or cold). It is not commonly used in the mild climates of California.

Tempered Air with Evaporative Cooling: The final option is to provide only tempered heating (to ≤60°F) with either evaporative (non-compressor) cooling or no cooling at all.

C. Kitchen Exhaust Acceptance §140.9(b)3

Acceptance tests for these measures are detailed in NA7.11. See chapter 12 of this manual.

10.8.4 Additions and Alterations

The application of these measures to additions and alterations was presented in the text from the previous section.

10.8.5 Compliance Documentation

10.9 Laboratory Exhaust

10.9.1 Overview

In the climates of California, laboratories have avearage annual energy intensities 10 to 20 times larger than offices when normalized by building area. The energy use of laboratories is driven from long hours of operation and the large quantities of outside air. Many lab buildings also have large internal loads.

Research in the climates of California showed annual cost of lab air at ~$3 to $5 per cfm/yr or $5 to $10/ft2/yr. At these costs the paybacks on retrofitting constant volume labs to variable air volume have been less than 10 years. With new construction the paybacks are much shorter.

The energy and demand savings are strongly dependant on the facility's characteristics including the following:

- The ratio of lab to non-lab space.
- The minimum airflow required by code or the facility EH&S department. These range from 4 air-changes per hour (ACH) to 18 ACH or higher.
- The climate.

Figure 10-41 below shows benchmarking data from Labs 21 for lab buildings in the San Francisco Bay area. The total energy use intensity in kBtu/gsf/yr is shown on the left access. The 26 labs are arranged from highest to lowest normalized energy use. The righ access is the "Lab Area Ratio" the ratio of lab area to total building area. There are three reference lines on this graph: the University of California campus wide average laboratory building end use intensity; the University of California Merced campus goal for their laboratories; and the average national energy end use for office buidlings.

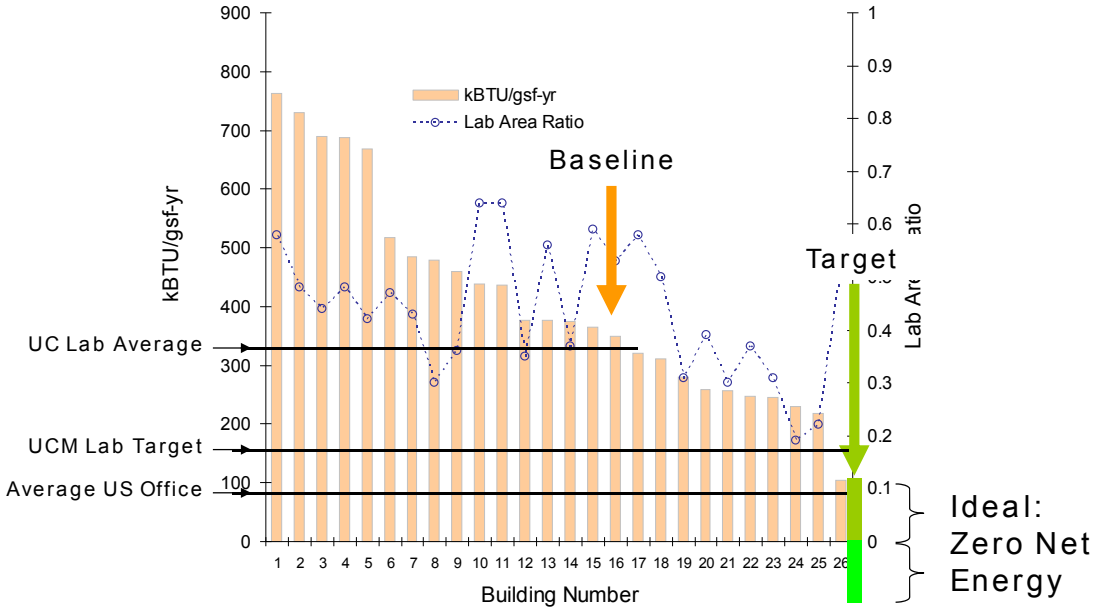

Figure 10-41 –Laboratory Benchmarking from Labs 21 for San Francisco Bay Area

Using the criteria for cost effectiveness in the Standard and very conservative estimates of the first costs (using costs from VAV retrofits not new construction) this measure was shown to be cost effective in all California Climate Zones up to 14 ACH of minimum ventilation

Using off the shelf varible air volume controls can greatly reduce the energy use in laboratory buildings. New to the 2013 Standard, Title 24 requires VAV controls on all zones not required to be constant volume by the AHJ, facility EH&S department or other applicable health and safety code. Furthermore recent changes in ANSI/AIHA Z9.5 and NFPA 45 would allow lower minimum airflows in many hoods which would further increase the savings from variable air volume design.

Figure 10-42 below show the zone components for a variable air volume (VAV) laboratory. There are three zone valves shown in this image: one each on the supply air to the zone; the fume hood (if one exists), and; the general exhuast valve (GEX) if one is needed. These zone valves can be venturi type valves as shown in this image or standard dampers like those used for VAV boxes in offices. The dampers or venturi valves must be designed to resist corrosion and damage from the exhuast. The hood valve when it is used is controlled to automatically maintain the design sash face velocity as the hood sash is opened or closed. The role of the supply valve is to maintain space pressurization by tracking the sum of the hood and general exhausts in the space. The supply valves are typically provided with a reheat coils to maintain space comfort for heating. The GEX is typically used to control the cooling, on call for cooling it opens, and the supply valve in turn opens to maintain space pressure. In some systems the supply modulates like a typical VAV box in response to the thermostat and the GEX modulates to maintain space pressure.

All three valves are made to control as either variable volume or constant volume depending on the application. A hood might for instance may be required to be constant volume for dilution. If this is the case, a constant volume bypass hood should be employed. Even with a constant volume hood you will need a pressure independent hood valve if the exhaust it is attached to includes any variable volume zones. The same is true for constant volume supply or general exhaust: if any zone on a supply or exhaust duct is variable volume, all zone ducts on it must have pressure independent controls.

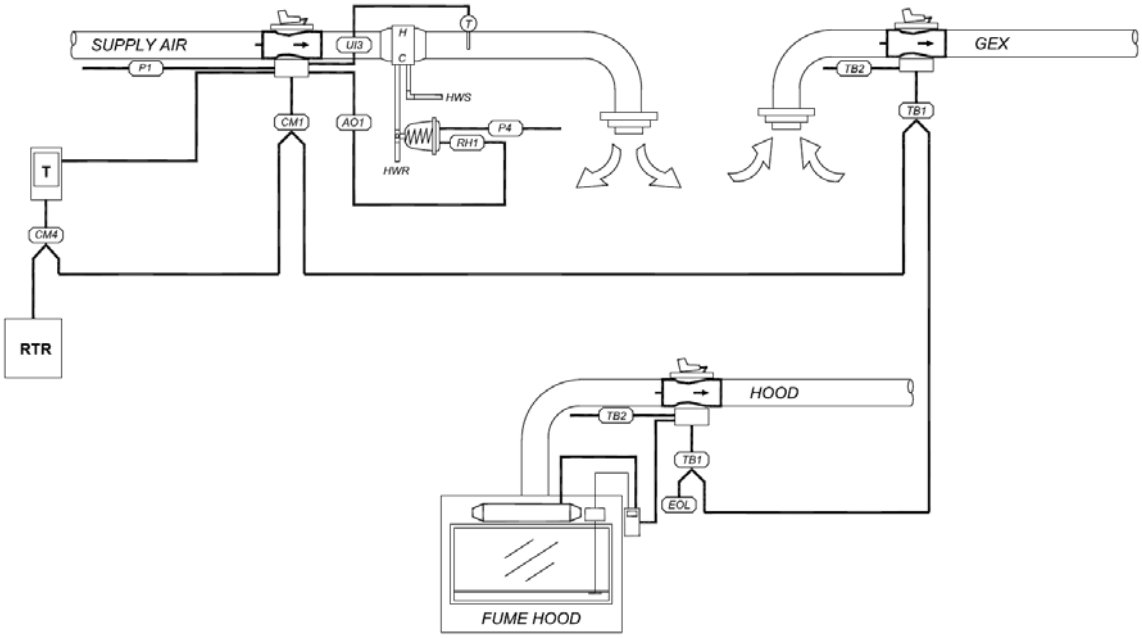

Figure 10-42 –Zone Components for A VAV Lab

The fume exhaust is generally blown out of a stack. The design of the stack and the velocity of the discharge is selected to disperse all contaminants so that they are sufficiently dilute by the time they are near any occupants. For contaminants like radio isotopes for which there is no acceptable level of dilution, the exhaust system typically has some form of filtration that captures the particles of concern. On general lab exhaust there is typically an inlet bypass damper on the exhuast fan that modulates to keep a constant volume of exhaust moving at the stacks. Using multiple stacks in parallel you can stage off stacks and fans to save more energy.

10.9.2 Mandatory Measures

There are no mandatory measures specific to laboratory exhaust. The equipment efficiencies in §110.1 and §110.2 apply.

10.9.3 Prescriptive Measures

The standards §140.9(c) require that all laboratory exhaust with minimum circulation rates of 10 ACH or lower shall be designed for variable volume control on the supply, fume exhaust and general exhaust.

An exception is provided for laboratory exhaust systems where constant volume is required by code, the Authority Having Jurisdiction (AHJ), or the faciity Environmental Health and Safety (EH&S) division (Exception 1 to §140.9(c)). Examples include: hoods using perchloric acid; hoods with radio isotopes; and exhaust systems conveying dust or vapors that need a minimum velocity for containment.

A second exception is provided for new zones added to an existing constant volume exhaust system (Exception 2 to §140.9(c)).

10.9.4 Additions and Alterations

As noted in the previous section variable volume controls are not reqiured if you are adding zones to an existing constant volume system.

10.9.5 Compliance Documentation