Proposed Improvements to Residential HVAC Diagnostic Test Protocols

Subtasks 2.1A and 2.1E

Work Authorization # 6
Contract #400-09-001
Covering Tasks 3 Subtask 2

2013 RESIDENTIAL BUILDING ENERGY EFFICIENCY STANDARDS

Prepared
June 7, 2011; Revised and Expanded June 14, 2011
Final revision June 28, 2011

By
Keith A. Temple, P.E.

Table of Contents

1. Introduction 3
1.1. Objectives 3
2. Background Research and Information 3
2.1. Existing Intellectual Property – AC System Diagnostic Protocols 3
2.2. Limitations of Temperature Split Method (RA3.2.2.7) 3
2.3. Limitations of Superheat Method (non-TxV systems) 4
2.4. Limitations of Subcooling Method (TxV systems) 4
2.5. Limitations of Alternate Charge Measurement Procedure (RA3.2.3) 4
2.6. Extended Test Range below 55°F Outdoor Air Temperature 5
2.7. Expanded Diagnostic Protocols 5
3. Summary of Proposed Improvements 6
3.1. Temperature Split Method (RA3.2.2.7) 6
3.2. Superheat Method (non-TxV systems) 6
3.3. Subcooling Method (TxV systems) 7
3.4. Alternate Charge Measurement Procedure (RA3.2.3) 7
3.5. Extended Test Range below 55°F Outdoor Air Temperature 7
3.6. Expanded Diagnostic Protocols 8
4. Discussion of Proposed Improvements 9
4.1. Temperature Split Method (RA3.2.2.7) 9

4.2. Superheat Method (non-TxV systems) 10
4.3. Subcooling Method (TxV systems) 10
4.4. Alternate Charge Measurement Procedure (RA3.2.3) 10
4.5. Extended Test Range below 55°F Outdoor Air Temperature 11
4.6. Expanded Diagnostic Protocols 11
5. Glosssary 28
6. References 29
6.1. Previous Investigations 29
6.2. Current Work Authorization (RWA06 Temple) 29
6.3. Other Investigations 29
6.4. Product Data 29

List of Figures

Figure 1. Draw-through System Configuration and Temperatures 12
Figure 2. Blow-through System Configuration and Temperatures 12
Figure 3. ITD Variation with Return Air Wet-bulb Temperature – Proposed Target Data and Current Target Table Data (Table ITD 80/_/x) [Figure 91 in Temple 2008a] 13
Figure 4. Superheat Variation with Return Air Wet-bulb Temperature – Proposed Target Data and Current Target Table Data (SH Table x/_/95) [Figure 88 in Temple 2008a].. 14
Figure 5. Temperature Split Measurement Configuration based on Carrier manual "HVAC Servicing Procedures" (1995) 15
Figure 6. Cooling Performance Data for York YZB03611 with G2FD036S21 16

List of Tables

Table 1. Target Temperature Split for Outdoor Air Dry-bulb Temperature of 50°F 17
Table 2. Target Temperature Split for Outdoor Air Dry-bulb Temperature of 60°F 17
Table 3. Target Temperature Split for Outdoor Air Dry-bulb Temperature of 70°F 18
Table 4. Target Temperature Split for Outdoor Air Dry-bulb Temperature of 80°F 18
Table 5. Target Temperature Split for Outdoor Air Dry-bulb Temperature of 90°F 19
Table 6. Target Temperature Split for Outdoor Air Dry-bulb Temperature of 95°F 19
Table 7. Target Temperature Split for Outdoor Air Dry-bulb Temperature of 100°F 20
Table 8. Target Temperature Split for Outdoor Air Dry-bulb Temperature of 110°F 20
Table 9. Target Temperature Split for Outdoor Air Dry-bulb Temperature of 120°F 21
Table 10. Target Superheat for Return Air Dry-bulb Temperature of 84°F 22
Table 11. Target Superheat for Return Air Dry-bulb Temperature of 82°F 23
Table 12. Target Superheat for Return Air Dry-bulb Temperature of 80°F 24
Table 13. Target Superheat for Return Air Dry-bulb Temperature of 78°F 25
Table 14. Target Superheat for Return Air Dry-bulb Temperature of 76°F 26
Table 15. Target Superheat for Return Air Dry-bulb Temperature of 74°F or less 27

1. Introduction

1.1. Objectives

1.1.1 Develop proposed improvements to the 2008 Title 24 Part 6 documents emphasizing Residential Appendices RA3.2 refrigerant charge verification issues, RA3.3 airflow measurement issues, and other HVAC field verification and diagnostic test protocol issues as needed.

1.1.2 Review previous PIER and ACEEE research papers (authored by Keith Temple) for recommendations appropriate to be incorporated into the 2013 regulations. Previous work includes the following:

1.1.2.1 Building Energy Research Grant (BERG) Final Report, Expanded Test Protocols for Low Ambient Testing of Unitary AC, September 5, 2008 [BERG report]

1.1.2.2 ACEEE Summer Study 2006, Enhanced Refrigeration Diagnostics for an Improved Air Conditioning Tune-up Program

1.1.2.3 ACEEE Summer Study 2004, A Performance Based Method to Determine Refrigerant Charge Level For Commissioning Unitary AC and HP Systems

2. Background Research and Information

2.1. Existing Intellectual Property – AC System Diagnostic Protocols

2.1.1 Temple and Hanson, US Patent 6,571,566, Method of Determining Refrigerant Charge Level in a Space Temperature Conditioning System (June 2003), assigned to Lennox Industries, Inc.

2.1.2 Rossi, et al., US Patent 6,658,373, Apparatus and method for detecting faults and providing diagnostics in vapor compression cycle equipment (December 2003), assigned to Field Diagnostic Services, Inc.

2.1.3 Braun, et al., US Patent 7,631,508, Apparatus and Method for Determining Refrigerant Charge Level (December 2009), assigned to Purdue Research Foundation

2.2. Limitations of Temperature Split Method (RA3.2.2.7)

2.2.1 The target table does not address outdoor air temperature (OAT) dependence (reference: BERG report and ASHRAE presentation)

2.2.2 The procedure indicates air temperature measurements for a blow-through fan configuration but does not address a draw-through fan configuration (reference: BERG report and ASHRAE presentation). Section 3.2.2.2.2 of the 2008 standard provides a diagram with locations for “supply plenum” and “return plenum” measurements. The basis for the target temperature split table is not well documented but appears to be draw-through configuration as shown in Figure 5 (reference: BERG report and ASHRAE presentation).

2.2.3 The target table does not address dry indoor coil condition which corresponds to test conditions with low indoor air wet-bulb temperature (reference: BERG report and ASHRAE presentation)

2.2.4 There is an offset between the target table values and experimental data for 10 EER systems. This is illustrated in Figure 78 of the BERG report (Temple, 2008a). At the nominal rating condition (80/67/95) the experimental data have an average value approximately 1.8˚F above the table value of 18.3˚F. (reference: BERG report and ASHRAE presentation)

2.2.5 The procedure does not allow the use of manufacturer's target data for the system being tested

2.2.6 In addition to indoor airflow, temperature split is impacted by any fault that reduces capacity

2.2.7 The method does not account for indoor airflow rates other than the nominal airflow (400 cfm/ton), except in the acceptance tolerance. The table was developed for a nominal airflow rate and verification at another airflow rate would require a table for that airflow rate. Temperature split (or ITD) variation with airflow for selected operating conditions is presented in Figure 12, Figure 32, Figure 43, and Figure 55 of the BERG report (Temple, 2008a).

2.3. Limitations of Superheat Method (non-TxV systems)

2.3.1 The target superheat table does not address dry indoor coil condition which corresponds to test conditions with low indoor air wet-bulb temperature (reference: BERG report)

2.3.2 The procedure requires a minimum indoor air dry-bulb temperature of 70°F when outdoor air temperature is between 55°F and 65°F

2.3.3 The procedure does not allow use of manufacturer's data

2.3.4 Superheat (non-TxV systems) can be impacted by system faults other than refrigerant charge including the following:

2.3.4.1 Liquid line restriction (high)
2.3.4.2 Evaporator heat transfer problem including reduced indoor airflow

2.4. Limitations of Subcooling Method (TxV systems)

2.4.1 Superheat verification was previously recommended for TxV systems (BERG report, 2008) and has been incorporated into the 2008 standards (manufacturer's recommended range or 4 to 25°F).

2.4.2 Subcooling (TxV systems) can be impacted by system faults other than refrigerant charge including the following:

2.4.2.1 Liquid line restriction (high)
2.4.2.2 Condenser heat transfer problem including reduced outdoor airflow
2.4.2.3 Non-condensable gas in system

2.5. Limitations of Alternate Charge Measurement Procedure (RA3.2.3)

2.5.1 The method is indicated (in RA3.2.3) as required for verification when the outdoor air temperature is below 55°F; however, it is not clear if the method is acceptable when the temperature is above 55°F.

2.5.2 The discussion (in RA3.2.3) of the nameplate (nominal) refrigerant charge included in the outdoor unit and the charge adjustment for the liquid line length provides an opportunity for confusion regarding what charge must be weighed (the total charge or the charge adjustment for the lineset).

2.5.3 The Instrument Specifications (RA3.2.2.1) do not provide requirements for refrigerant scales.

2.5.4 The Residential Compliance Manual (CEC-400-2008-016-CMF) indicates "The Weigh-In Charging Method is used only when the outdoor temperature is below 55°F." Additionally the manual indicates "By weight, add or remove the proper amount of refrigerant to compensate for the actual lineset length/diameter using the manufacturer's specifications." The form CF-6R-MECH-26-HERS (Refrigerant Charge Verification - Alternate Measurement Procedure) provided in this document appears to be consistent with these instructions.

2.5.5 The current requirements are unclear. Weighing the entire system refrigerant charge should be an acceptable method of verification for an installer (or technician) under any test or system conditions.

2.6. Extended Test Range below 55°F Outdoor Air Temperature

2.6.1 An extended test range to 50°F outdoor air dry-bulb temperature was previously recommended (BERG report, 2008). The proposal included enhancements to the superheat and subcooling methods of refrigerant charge verification (and also temperature split method) to address the extended test conditions.

2.7. Expanded Diagnostic Protocols

2.7.1 An improved refrigerant charge diagnostic protocol has been proposed by Temple (2004) that is based on a combination of superheat and subcooling and is applicable to TxV and non-TxV systems. The method was found to be relatively insensitive to other system faults and a similar method has since been proposed by researchers at Purdue University (Li and Braun, 2005 and 2008). The method developed by Temple requires applicable manufacturer data for application to a specific system (target values). The method of Li and Braun is indicated to work without specific manufacturer data for the system. There are potential intellectual property issues associated with a patent assigned to Lennox Industries (US Patent 6,571,566) and a patent assigned to Purdue University (US Patent 7,631,508).

2.7.2 An improved diagnostic protocol has been proposed by Temple and Rossi (2006) that is based on an evaluation of refrigerant evaporating temperature (at the compressor suction) and refrigerant condensing temperature (at the condenser outlet). This protocol has the advantage of identifying other system faults that can impact the refrigerant charge verification based on superheat or subcooling alone. This method requires appropriate target values for evaporating temperature and condensing temperature.

3. Summary of Proposed Improvements

3.1. Temperature Split Method (RA3.2.2.7)

3.1.1 Clarify the procedure to include the following:

3.1.1.1 Identify both draw-through and blow-through fan configurations. Refer to Figure 1 and Figure 2.

3.1.1.2 Clearly define temperature split (TS) to include impact of fan heat

3.1.1.3 Define basis for target table (draw-through or blow-through) and correction for alternate configuration

3.1.2 Provide new tables with OAT dependence and correction for offset based on published experimental data for 10 EER systems. Also extend tables to 65°F indoor air dry-bulb temperature (from 70°F).

3.1.3 Allow use of model-specific data when available from manufacturer. The target value shall be selected based on the operating conditions and design airflow rate using the data for the corresponding outdoor and indoor units. Example data are presented in Figure 6 for a York YZB03611. The temperature split value can be computed from the (net) sensible cooling capacity (S.C.) given in the table in units of kBtuh. For an airflow rate of 1,200 cfm the temperature split at 80/67/95 would be calculated as follows:

Equation 1 $$TS_{80/67/95} = \frac{25{,}900}{1.08 \cdot 1{,}200} °F = 20.0°F$$

3.1.4 Potential issues:

3.1.4.1 The procedure will be more complicated with additional tables, three parameters required to obtain a target value, and a correction for the alternate fan configuration.

3.1.4.2 The proposed tables are based on a rated system efficiency of 10 EER. Manufacturers can be encouraged to publish data for their higher efficiency systems and airflow rates other than the nominal 400 cfm/ton.

3.1.4.3 The proposed tables are based on the limited datasets as presented in the BERG report (Temple 2008a). The datasets presented in Figure 77, of the referenced report, have consistent behavior and the analysis could be expanded with manufacturer data similar to the data presented in Figure 6 of this document.

3.2. Superheat Method (non-TxV systems)

3.2.1 Provide revised superheat tables that include indoor air dry-bulb temperature dependence to address dry indoor coil conditions and extend testing to low indoor air wet-bulb temperatures. Also extend tables to 65°F indoor air dry-bulb temperature, regardless of the outdoor air temperature. (The current protocol requires a minimum indoor air dry-bulb temperature of 70°F when outdoor air temperature is between 55°F and 65°F.)

3.2.2 Allow use of model-specific data when available from the manufacturer

3.2.3 Potential issues:

3.2.3.1 The procedure will be more complicated with additional tables and three parameters required to obtain a target value.

3.2.3.2 The proposed tables are based on the limited datasets as presented in the BERG report (Temple 2008a). Manufacturers can be encouraged to publish data for their systems if performance differs from the default tables.

3.3. Subcooling Method (TxV systems)

3.3.1 No recommendations at this time for the basic protocol.

3.3.2 It is recommended that the acceptance limits for HERS raters be revised from ±4°F of target to ±6°F of the target subcooling value and not less than 2°F subcooling. This recommendation is presented in lieu of the recommendation presented by Wilcox and Proctor (2°F subcooling to +8°F of target) in the December 2010 CASE Report. Refer to discussion in the document "Efficiency and Subcooling Variation with Refrigerant Charge for Unitary Air Conditioning Systems with TxV Expansion Device" (Temple, June 2011). The proposed acceptance range would correspond to an EER degradation of approximately 7.5% or sensible EER degradation of 5% for the NI system presented by Temple (June 2011).

3.3.3 Potential issues: none identified. Refer to CASE Report by Wilcox and Proctor for discussion of HERS rater compliance with subcooling tolerance.

3.4. Alternate Charge Measurement Procedure (RA3.2.3)

3.4.1 Provide clarification that the method is acceptable when the temperature is above 55°F.

3.4.2 Provide clarification that the method is acceptable in the following two scenarios:

3.4.2.1 For new system or new outdoor unit (with factory charge in outdoor unit), by installer (or technician), and weigh in lineset charge adjustment after evacuation of lineset and indoor coil.

3.4.2.2 For new, existing, or retrofit system, by installer (or technician), and weigh in total system charge after evacuation of entire system.

3.4.3 Provide specifications (minimum accuracy) for refrigerant scales in Instrument Specifications (RA3.2.2.2).

3.4.4 Revise the Residential Compliance Manual to be consistent with RA3.2.3.

3.4.5 Potential issues: none identified, other than the fact that the method is not applicable to HERS raters.

3.5. Extended Test Range below 55°F Outdoor Air Temperature

3.5.1 An extended outdoor air temperature test range is proposed for TxV systems, extending the low temperature limit from 55°F to 50°F (reference: BERG report). This proposal does not require any revisions to the existing subcooling protocol.

An extension of the temperature split tables would be required to make the method compatible (addressed in 3.1).

3.5.2 Extending the test range (to 50°F) for non-TxV systems would require expanded superheat tables and is not recommended at this time due to the limited datasets available when the BERG research project was completed. It would be desirable to obtain additional laboratory test data to support extending the test range (to 50°F outdoor air temperature) for non-TxV systems.

3.5.3 Potential issues:

3.5.3.1 Manufacturer resistance to testing below 55°F as expressed in the AHRI letter dated January 10, 2011 in response to the CASE report. It is suggested that AHRI be approached with the concept of extending the test range to 50°F (for TxV systems) to obtain feedback on this limited test range.

3.5.3.2 There may be concern with the performance of the TxV below 55°F. Verification of superheat should be sufficient to address this issue. It would be desirable to obtain additional laboratory test data for TxV systems to support the proposed extended test range (to 50°F outdoor air temperature). A manufacturer can publish subcooling target data at different outdoor air temperatures if a system does not maintain constant subcooling over the allowable test range.

3.6. Expanded Diagnostic Protocols

3.6.1 An expanded diagnostic protocol is not recommended at this time due to the current schedule and additional research required, but should be reconsidered in the future. Any recent related research should be identified and reviewed. Investigation is required to established target values for the parameters used by the previously proposed methods.

3.6.2 Proposed Diagnostic Evaluation tables are presented by Temple (2008b) in Tables RD-5a through RD-5d. The tables are applicable to TxV and non-TxV systems. Both superheat and subcooling are required regardless of the metering device. Tables are provided for indoor airflow evaluation based on airflow measurement or the temperature split method. These tables could be included as a non-mandatory part of the standard.

3.6.3 Potential issues:

3.6.3.1 There is intellectual property associated with many of the existing advanced diagnostic protocols. There is some public-domain work available from NIST (NIST 2008). The NIST work includes a proposed statistical rule-based fault detection and diagnosis module.

3.6.3.2 There has not been industry consensus on how to use condensing temperature and evaporating temperature for system diagnostics.

3.6.3.3 There are limited experimental datasets available for some faults, e.g., liquid line restriction and non-condensable gases in the system.

3.6.3.4 There is a fundamental issue that needs to be addressed regarding whether the standard should focus on protocols that address specific faults (that impact efficiency) or the installed energy efficiency of the system.

4. Discussion of Proposed Improvements

4.1. Temperature Split Method (RA3.2.2.7)

4.1.1 Temperature split (TS) is defined as the difference between the return air dry-bulb temperature and the supply air dry-bulb temperature for a draw-through system as indicated in Figure 1. The supply air temperature measurement location is downstream of the fan and the return air temperature measurement location is upstream of the evaporator (indoor) coil. The target temperature split values provided in the tables are for a draw-through system (The reference value at 80/67/95 is 19.9°F for the proposed tables versus the 19.8°F value of Figure 1). Based on data presented by Temple (2009) a correction is applied for blow-through systems. For a blow-through system (Figure 2) the measurement locations are upstream of the fan (return) and downstream of the evaporator coil (supply). The target temperature split (TS) value for a blow-through system is estimated using the following equation:

Equation 2 $$TS_{blow-through} = TS_{table} + 0.5°F$$

4.1.2 New proposed temperature split tables are presented by Temple (2008b) in Tables RD-4a through RD-4i. The tables correspond to different outdoor air dry-bulb temperatures (50°F, 60°F, 70°F, 80°F, 90°F, 95°F,100°F, 110°F, and 120°F) and values can be interpolated between tables. The proposed tables are included in this document as Table 1 through Table 9. Selected data for the proposed tables are presented in Figure 3 with data from the current table. The data are presented as ITD in this figure instead of TS. The two values differ by 1.1°F as indicated in Figure 1 and the Glossary. (The proposed and current datasets for the 80/_/ 95 conditions can be compared.) The nominal temperature split value at 80/67/95 changes from 18.3°F to 19.9°F (ITD changes from 19.4°F to 21.0°F). The tables address outdoor air dry-bulb temperature dependence and extend testing to low indoor air wet-bulb temperatures and indoor air dry-bulb temperature to 65°F (from 70°F).

4.1.3 The requirements for a valid test shall include the following:

4.1.3.1 50°F ≤ OAT ≤ 120°F
4.1.3.2 65°F ≤ RDB ≤ 84°F
4.1.3.3 RWB ≤ 76°F

4.1.4 Allow use of model-specific data when available from the equipment manufacturer

4.1.4.1 The requirements of 4.1.3 (above) shall apply unless the manufacturer further limits the test

4.1.4.2 The target value shall be selected based on the measured operating conditions and the specified design airflow rate using the manufacturer's data for the corresponding outdoor and indoor units.

4.1.4.3 The source of manufacturer data and corresponding target value shall be identified in the project records (by installer or HERS rater)

4.2. Superheat Method (non-TxV systems)

4.2.1 New proposed superheat tables are presented by Temple (2008b) in Tables RD-2a through RD-2f. The tables correspond to different indoor air dry-bulb temperatures (84°F, 82°F, 80°F, 78°F, 76°F, and 74°F or less) and values can be interpolated between tables. Selected data for the proposed tables are presented in Figure 4 with data from the current table. (The proposed and current datasets for outdoor air temperature of 95°F can be compared.) The nominal superheat of 12°F at 80/67/95 is retained for the new tables. The column for 50°F outdoor air temperature should be removed from the tables in the referenced document (Temple, 2008b). Revised tables are included in this document as Table 10 through Table 15. The tables address indoor air dry-bulb temperature dependence, extending testing to low indoor air wet-bulb temperatures and indoor air dry-bulb temperature to 65°F.

4.2.2 It is proposed to limit the valid test to conditions when the target superheat tables provide a value equal to or greater than 5°F. The use of subcooling at low target superheat, as proposed by Temple (2008a), is not recommended at this time because of the limited experimental data available for validation of the method.

4.2.3 The requirements for a valid test shall include the following:

4.2.3.1 $55°F \leq OAT \leq 115°F$

4.2.3.2 $65°F \leq RDB \leq 84°F$

4.2.3.3 $RWB \leq 76°F$

4.2.3.4 $5.0°F \leq SH_{target}$

4.2.4 Allow use of model-specific data when available from the equipment manufacturer

4.2.4.1 The requirements of 4.2.3 (above) shall apply unless the manufacturer further limits the test

4.2.4.2 The source of manufacturer data and corresponding target value shall be identified in the project records (by installer or HERS rater)

4.3. Subcooling Method (TxV systems)

4.3.1 There are no recommendations for the basic subcooling method.

4.3.2 It is recommended that acceptance limits for HERS raters be revised from ±4°F to ±6°F of the target subcooling value and not less than 2°F subcooling. No additional definition is required.

4.4. Alternate Charge Measurement Procedure (RA3.2.3)

4.4.1 The method of refrigerant charge verification is acceptable regardless of the outdoor air temperature (including when the temperature is above 55°F).

4.4.2 Two options are available for application of the method:

4.4.2.1 Option 1 (Charge Adjustment): Applicable to a new system or existing system when a new outdoor unit is installed (with factory charge in outdoor unit). The method can be used by an installer (or technician). Installer shall weigh in lineset charge adjustment after evacuation of lineset and indoor coil. The documentation shall include the calculated charge adjustment for the lineset.

4.4.2.2 Option 2 (Total Charge): Applicable to all systems. The method can be used by an installer (or technician). The installer shall weigh in the total system charge after evacuation of the entire system. The total system charge includes the nameplate charge for the outdoor unit and any adjustment for the lineset length in accordance with the manufacturer's instruction. The documentation shall include the nameplate charge and the calculated lineset adjustment.

4.4.3 A refrigerant scale having an accuracy of ±0.5 oz or better shall be used. For a 2-ton system with a nameplate refrigerant charge of 7.5 lb (120 oz) this would correspond to ±0.4% of charge.

4.4.4 Revise the Residential Compliance Manual to be consistent with RA3.2.3.

4.5. Extended Test Range below 55°F Outdoor Air Temperature

4.5.1 The outdoor air temperature limit shall be extended from 55°F to 50°F for refrigerant charge verification of TxV (variable metering) systems using the subcooling method. For a valid test the superheat must be within the manufacturer's acceptable range or the values specified in the standard. The extended test range is not applicable to non-TxV systems.

4.5.2 The requirements for a valid subcooling test shall include the following:

4.5.2.1 50°F ≤ OAT ≤ 120°F

4.5.2.2 65°F ≤ RDB ≤ 84°F

4.5.2.3 RWB ≤ 76°F

4.5.2.4 SH in manufacturer's valid range or 4°F ≤ SH ≤ 25°F for installer

4.5.2.5 (target-3°F) ≤ SC ≤ (target+3°F) for installer

4.6. Expanded Diagnostic Protocols

4.6.1 No recommendations

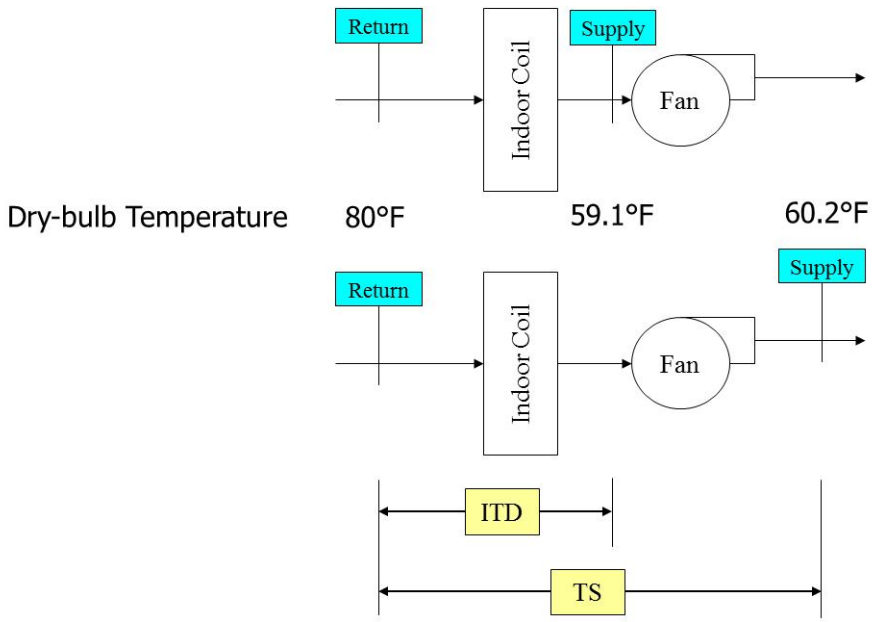

Figure 1. Draw-through System Configuration and Temperatures

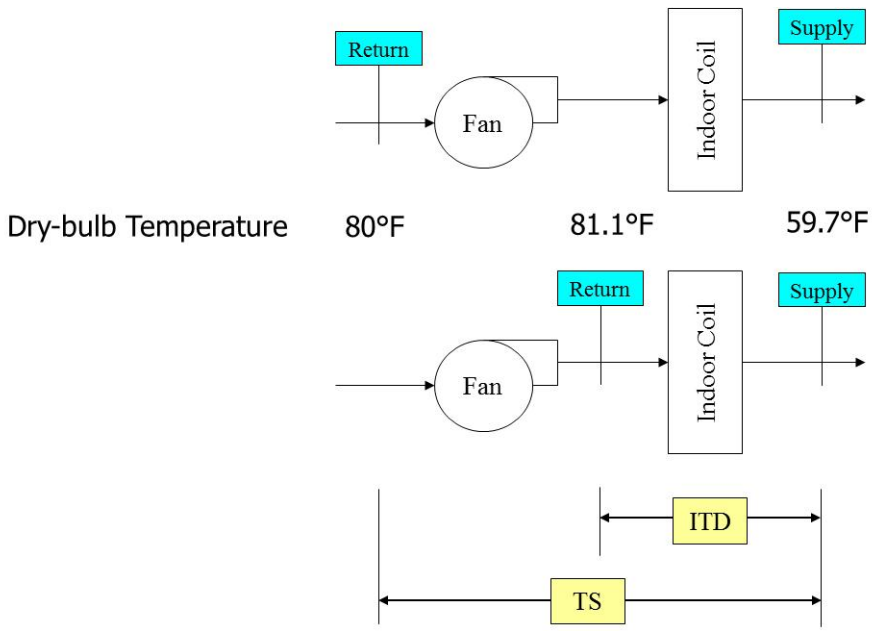

Figure 2. Blow-through System Configuration and Temperatures

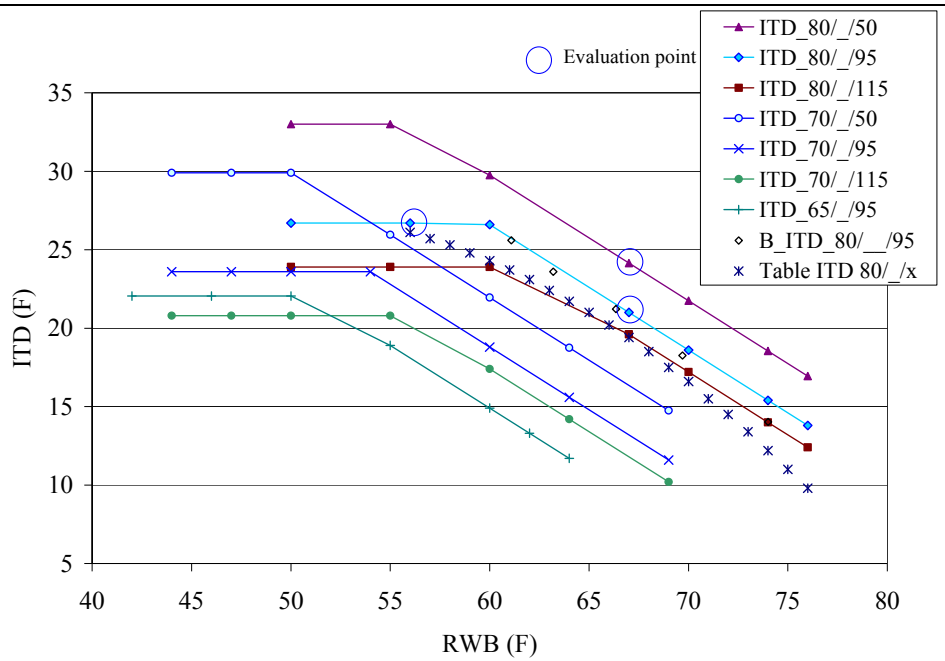

Figure 3. ITD Variation with Return Air Wet-bulb Temperature – Proposed Target Data and Current Target Table Data (Table ITD 80/_/x) [Figure 91 in Temple 2008a]

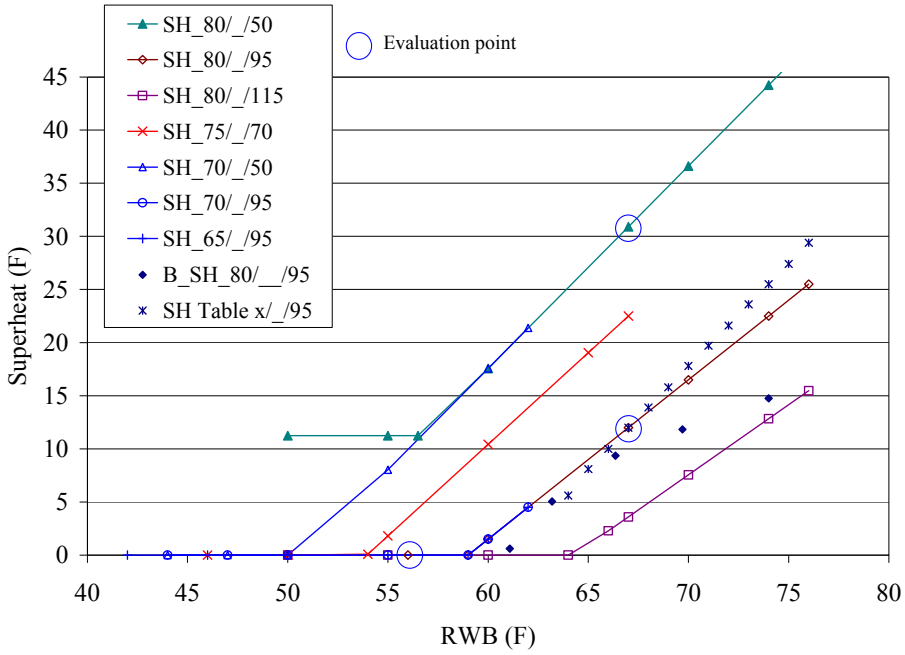

Figure 4. Superheat Variation with Return Air Wet-bulb Temperature – Proposed Target Data and Current Target Table Data (SH Table x/_/95) [Figure 88 in Temple 2008a]

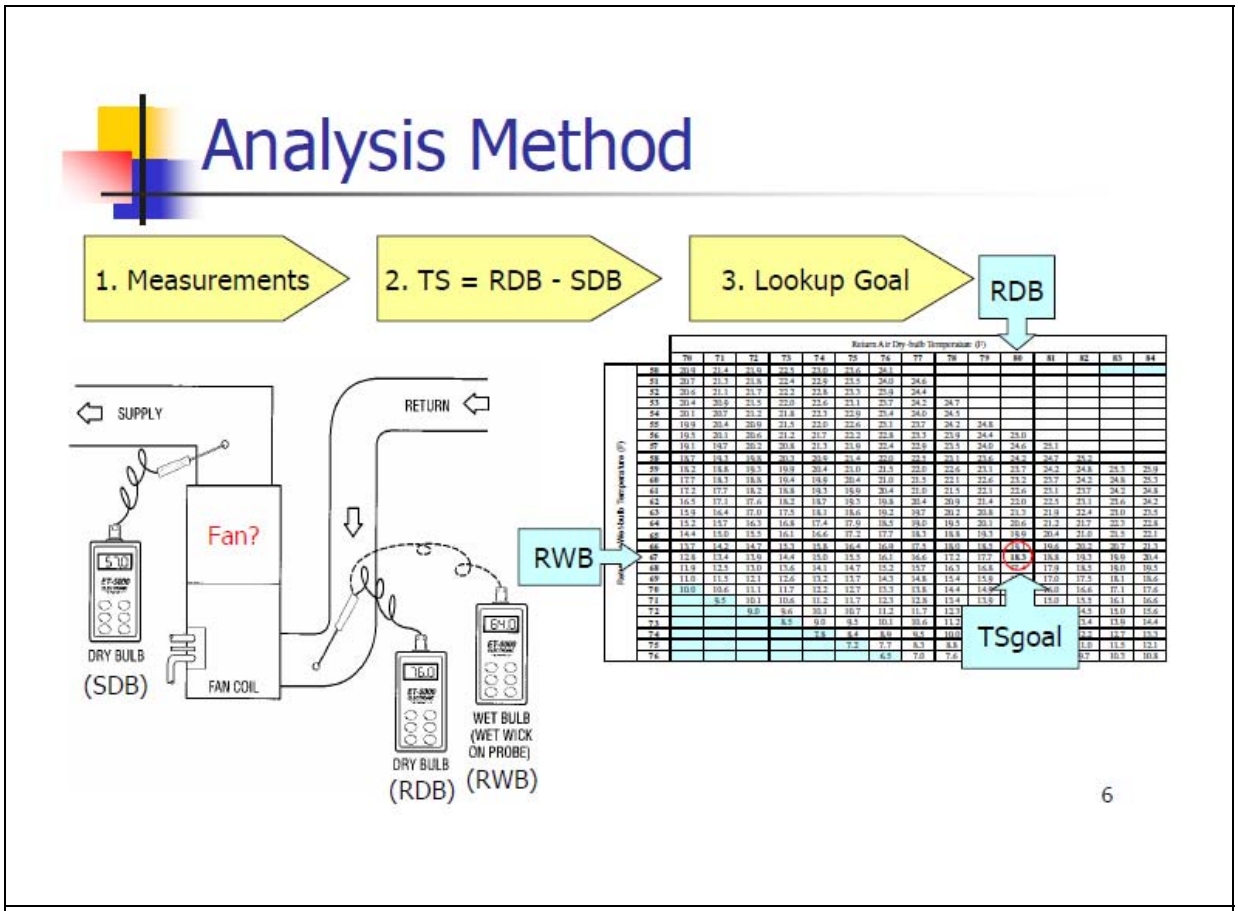

Figure 5. Temperature Split Measurement Configuration based on Carrier manual "HVAC Servicing Procedures" (1995)

COOLING PERFORMANCE DATA																
OUTDOOR UNIT MODEL NO.		YZB03611														
INDOOR COIL MODEL NO.		G2FD036S21														
CONDENSER ENTERING AIR TEMPERATURE	ID CFM	1000					1200					1400				
	ID DB (°F)	80	80	75	80	80	80	80	75	80	80	80	80	75	80	80
	ID WB (°F)	57	62	62	67	72	57	62	62	67	57	62	62	67	72	57
65	T.C.	29.0	31.6	30.5	36.3	39.9	30.2	32.9	30.9	36.4	40.0	31.5	34.2	31.4	36.6	40.2
	S.C.	28.9	28.5	24.2	24.0	19.3	30.2	31.2	26.4	26.5	20.7	31.4	34.0	28.6	29.0	22.1
	K.W.	2.5	2.5	2.5	2.6	2.6	2.5	2.5	2.6	2.6	2.6	2.5	2.5	2.6	2.6	2.6
75	T.C.	32.2	34.2	34.7	39.3	42.4	33.9	35.1	35.2	39.7	42.7	35.7	36.1	35.8	40.1	43.1
	S.C.	32.1	30.2	25.2	25.5	20.1	33.9	32.9	27.4	27.8	21.6	35.6	35.5	29.6	30.1	23.1
	K.W.	2.2	2.2	2.3	2.3	2.3	2.2	2.2	2.3	2.3	2.3	2.2	2.3	2.3	2.3	2.3
85	T.C.	30.6	32.9	32.6	37.8	41.1	32.1	34.0	33.1	38.1	41.4	33.6	35.2	33.6	38.3	41.6
	S.C.	30.5	29.3	24.7	24.8	19.7	32.0	32.0	26.9	27.2	21.1	33.5	34.8	29.1	29.6	22.6
	K.W.	2.4	2.4	2.4	2.4	2.5	2.4	2.4	2.4	2.4	2.4	2.4	2.4	2.4	2.4	2.4
95	T.C.	29.2	30.7	30.5	35.0	38.3	30.5	31.8	30.9	35.3	38.5	31.8	32.9	31.3	35.5	38.7
	S.C.	29.1	28.5	23.6	23.7	18.8	30.4	30.6	25.7	25.9	20.2	31.8	32.8	27.8	28.1	21.5
	K.W.	2.8	2.8	2.8	2.8	2.9	2.8	2.8	2.8	2.8	2.8	2.8	2.8	2.8	2.8	2.8
105	T.C.	27.8	28.5	28.4	32.3	35.4	29.0	29.6	28.7	32.5	35.6	30.1	30.6	28.9	32.7	35.7
	S.C.	27.8	27.6	22.5	22.7	17.8	28.9	29.2	24.5	24.7	19.2	30.0	30.9	26.5	26.7	20.5
	K.W.	3.2	3.2	3.2	3.2	3.2	3.2	3.2	3.2	3.2	3.2	3.2	3.2	3.2	3.2	3.2
115	T.C.	26.5	26.3	26.4	29.6	32.6	27.4	27.4	26.5	29.8	32.7	28.4	28.5	26.7	29.9	32.9
	S.C.	26.4	26.8	21.4	21.7	16.9	27.4	27.9	23.3	23.5	18.2	28.3	29.0	25.2	25.3	19.4
	K.W.	3.6	3.5	3.6	3.6	3.6	3.6	3.6	3.6	3.6	3.6	3.6	3.6	3.6	3.6	3.6
125	T.C.	25.1	24.2	24.4	26.9	29.8	25.9	25.2	24.4	27.0	29.9	26.7	26.3	24.4	27.2	30.0
	S.C.	25.1	26.0	20.4	20.7	16.0	25.8	26.5	22.2	22.3	17.2	26.6	27.1	23.9	23.9	18.4
	K.W.	4.0	3.9	3.9	4.0	4.0	4.0	3.9	4.0	4.0	4.0	4.0	4.0	4.0	4.0	4.0
NOTE: ALL CAPACITIES ARE NET (KBTUH) WITH INDOOR FAN HEAT ALREADY DEDUCTED AT 1250 BTUH/1000 CFM.																

Figure 6. Cooling Performance Data for York YZB03611 with G2FD036S21

Table 1. Target Temperature Split for Outdoor Air Dry-bulb Temperature of 50°F

Return Air Wet-bulb Temperature (F)	Return Air Dry-bulb Temperature (F)																			
	65	**66**	**67**	**68**	**69**	**70**	**71**	**72**	**73**	**74**	**75**	**76**	**77**	**78**	**79**	**80**	**81**	**82**	**83**	**84**
46	27.3	27.6	27.9	28.2	28.5	28.8	29.1	29.4	29.7	30.0										
47	27.3	27.6	27.9	28.2	28.5	28.8	29.1	29.4	29.7	30.0	30.4	30.7								
48	26.6	27.3	27.9	28.2	28.5	28.8	29.1	29.4	29.7	30.0	30.4	30.7	31.0	31.3						
49	25.8	26.5	27.3	28.1	28.5	28.8	29.1	29.4	29.7	30.0	30.4	30.7	31.0	31.3	31.6	31.9				
50	25.0	25.7	26.5	27.3	28.1	28.8	29.1	29.4	29.7	30.0	30.4	30.7	31.0	31.3	31.6	31.9	32.0	32.0		
51	24.2	24.9	25.7	26.5	27.3	28.1	28.8	29.4	29.7	30.0	30.4	30.7	31.0	31.3	31.6	31.9	32.0	32.0	32.0	32.0
52	23.4	24.1	24.9	25.7	26.5	27.3	28.0	28.8	29.6	30.0	30.4	30.7	31.0	31.3	31.6	31.9	32.0	32.0	32.0	32.0
53	22.6	23.3	24.1	24.9	25.7	26.5	27.2	28.0	28.8	29.6	30.4	30.7	31.0	31.3	31.6	31.9	32.0	32.0	32.0	32.0
54	21.8	22.5	23.3	24.1	24.9	25.7	26.4	27.2	28.0	28.8	29.6	30.3	31.0	31.3	31.6	31.9	32.0	32.0	32.0	32.0
55	21.0	21.7	22.5	23.3	24.1	24.9	25.6	26.4	27.2	28.0	28.8	29.5	30.3	31.1	31.6	31.9	32.0	32.0	32.0	32.0
56	20.2	20.9	21.7	22.5	23.3	24.1	24.8	25.6	26.4	27.2	28.0	28.7	29.5	30.3	31.1	31.9	32.0	32.0	32.0	32.0
57	19.4	20.1	20.9	21.7	22.5	23.3	24.0	24.8	25.6	26.4	27.2	27.9	28.7	29.5	30.3	31.1	31.8	32.0	32.0	32.0
58	18.6	19.3	20.1	20.9	21.7	22.5	23.2	24.0	24.8	25.6	26.4	27.1	27.9	28.7	29.5	30.3	31.0	31.8	32.0	32.0
59	17.8	18.5	19.3	20.1	20.9	21.7	22.4	23.2	24.0	24.8	25.6	26.3	27.1	27.9	28.7	29.5	30.2	31.0	31.8	32.0
60	17.0	17.7	18.5	19.3	20.1	20.9	21.6	22.4	23.2	24.0	24.8	25.5	26.3	27.1	27.9	28.7	29.4	30.2	31.0	31.8
61	16.2	16.9	17.7	18.5	19.3	20.1	20.8	21.6	22.4	23.2	24.0	24.7	25.5	26.3	27.1	27.9	28.6	29.4	30.2	31.0
62	15.4	16.1	16.9	17.7	18.5	19.3	20.0	20.8	21.6	22.4	23.2	23.9	24.7	25.5	26.3	27.1	27.8	28.6	29.4	30.2
63	14.6	15.3	16.1	16.9	17.7	18.5	19.2	20.0	20.8	21.6	22.4	23.1	23.9	24.7	25.5	26.3	27.0	27.8	28.6	29.4
64	13.8	14.5	15.3	16.1	16.9	17.7	18.4	19.2	20.0	20.8	21.6	22.3	23.1	23.9	24.7	25.5	26.2	27.0	27.8	28.6
65		13.7	14.5	15.3	16.1	16.9	17.6	18.4	19.2	20.0	20.8	21.5	22.3	23.1	23.9	24.7	25.4	26.2	27.0	27.8
66			13.7	14.5	15.3	16.1	16.8	17.6	18.4	19.2	20.0	20.7	21.5	22.3	23.1	23.9	24.6	25.4	26.2	27.0
67				13.7	14.5	15.3	16.0	16.8	17.6	18.4	19.2	19.9	20.7	21.5	22.3	**23.1**	23.8	24.6	25.4	26.2
68					13.7	14.5	15.2	16.0	16.8	17.6	18.4	19.1	19.9	20.7	21.5	22.3	23.0	23.8	24.6	25.4
69						13.7	14.4	15.2	16.0	16.8	17.6	18.3	19.1	19.9	20.7	21.5	22.2	23.0	23.8	24.6
70							13.6	14.4	15.2	16.0	16.8	17.5	18.3	19.1	19.9	20.7	21.4	22.2	23.0	23.8
71								13.6	14.4	15.2	16.0	16.7	17.5	18.3	19.1	19.9	20.6	21.4	22.2	23.0
72									13.6	14.4	15.2	15.9	16.7	17.5	18.3	19.1	19.8	20.6	21.4	22.2
73										13.6	14.4	15.1	15.9	16.7	17.5	18.3	19.0	19.8	20.6	21.4
74											13.6	14.3	15.1	15.9	16.7	17.5	18.2	19.0	19.8	20.6
75												13.5	14.3	15.1	15.9	16.7	17.4	18.2	19.0	19.8
76													13.5	14.3	15.1	15.9	16.6	17.4	18.2	19.0

Table 2. Target Temperature Split for Outdoor Air Dry-bulb Temperature of 60°F

Return Air Wet-bulb Temperature (F)	Return Air Dry-bulb Temperature (F)																			
	65	**66**	**67**	**68**	**69**	**70**	**71**	**72**	**73**	**74**	**75**	**76**	**77**	**78**	**79**	**80**	**81**	**82**	**83**	**84**
46	25.9	26.2	26.5	26.8	27.1	27.4	27.7	28.0	28.3	28.6										
47	25.9	26.2	26.5	26.8	27.1	27.4	27.7	28.0	28.3	28.6	29.0	29.3								
48	25.9	26.2	26.5	26.8	27.1	27.4	27.7	28.0	28.3	28.6	29.0	29.3	29.6	29.9						
49	25.1	25.8	26.5	26.8	27.1	27.4	27.7	28.0	28.3	28.6	29.0	29.3	29.6	29.9	30.2	30.5				
50	24.3	25.0	25.8	26.6	27.1	27.4	27.7	28.0	28.3	28.6	29.0	29.3	29.6	29.9	30.2	30.5	30.8	31.1		
51	23.5	24.2	25.0	25.8	26.6	27.4	27.7	28.0	28.3	28.6	29.0	29.3	29.6	29.9	30.2	30.5	30.8	31.1	31.4	31.7
52	22.7	23.4	24.2	25.0	25.8	26.6	27.3	28.0	28.3	28.6	29.0	29.3	29.6	29.9	30.2	30.5	30.8	31.1	31.4	31.7
53	21.9	22.6	23.4	24.2	25.0	25.8	26.5	27.3	28.1	28.6	29.0	29.3	29.6	29.9	30.2	30.5	30.8	31.1	31.4	31.7
54	21.1	21.8	22.6	23.4	24.2	25.0	25.7	26.5	27.3	28.1	28.9	29.3	29.6	29.9	30.2	30.5	30.8	31.1	31.4	31.7
55	20.3	21.0	21.8	22.6	23.4	24.2	24.9	25.7	26.5	27.3	28.1	28.8	29.6	29.9	30.2	30.5	30.8	31.1	31.4	31.7
56	19.5	20.2	21.0	21.8	22.6	23.4	24.1	24.9	25.7	26.5	27.3	28.0	28.8	29.6	30.2	30.5	30.8	31.1	31.4	31.7
57	18.7	19.4	20.2	21.0	21.8	22.6	23.3	24.1	24.9	25.7	26.5	27.2	28.0	28.8	29.6	30.4	30.8	31.1	31.4	31.7
58	17.9	18.6	19.4	20.2	21.0	21.8	22.5	23.3	24.1	24.9	25.7	26.4	27.2	28.0	28.8	29.6	30.3	31.1	31.4	31.7
59	17.1	17.8	18.6	19.4	20.2	21.0	21.7	22.5	23.3	24.1	24.9	25.6	26.4	27.2	28.0	28.8	29.5	30.3	31.1	31.7
60	16.3	17.0	17.8	18.6	19.4	20.2	20.9	21.7	22.5	23.3	24.1	24.8	25.6	26.4	27.2	28.0	28.7	29.5	30.3	31.1
61	15.5	16.2	17.0	17.8	18.6	19.4	20.1	20.9	21.7	22.5	23.3	24.0	24.8	25.6	26.4	27.2	27.9	28.7	29.5	30.3
62	14.7	15.4	16.2	17.0	17.8	18.6	19.3	20.1	20.9	21.7	22.5	23.2	24.0	24.8	25.6	26.4	27.1	27.9	28.7	29.5
63	13.9	14.6	15.4	16.2	17.0	17.8	18.5	19.3	20.1	20.9	21.7	22.4	23.2	24.0	24.8	25.6	26.3	27.1	27.9	28.7
64	13.1	13.8	14.6	15.4	16.2	17.0	17.7	18.5	19.3	20.1	20.9	21.6	22.4	23.2	24.0	24.8	25.5	26.3	27.1	27.9
65		13.0	13.8	14.6	15.4	16.2	16.9	17.7	18.5	19.3	20.1	20.8	21.6	22.4	23.2	24.0	24.7	25.5	26.3	27.1
66			13.0	13.8	14.6	15.4	16.1	16.9	17.7	18.5	19.3	20.0	20.8	21.6	22.4	23.2	23.9	24.7	25.5	26.3
67				13.0	13.8	14.6	15.3	16.1	16.9	17.7	18.5	19.2	20.0	20.8	21.6	**22.4**	23.1	23.9	24.7	25.5
68					13.0	13.8	14.5	15.3	16.1	16.9	17.7	18.4	19.2	20.0	20.8	21.6	22.3	23.1	23.9	24.7
69						13.0	13.7	14.5	15.3	16.1	16.9	17.6	18.4	19.2	20.0	20.8	21.5	22.3	23.1	23.9
70							12.9	13.7	14.5	15.3	16.1	16.8	17.6	18.4	19.2	20.0	20.7	21.5	22.3	23.1
71								12.9	13.7	14.5	15.3	16.0	16.8	17.6	18.4	19.2	19.9	20.7	21.5	22.3
72									12.9	13.7	14.5	15.2	16.0	16.8	17.6	18.4	19.1	19.9	20.7	21.5
73										12.9	13.7	14.4	15.2	16.0	16.8	17.6	18.3	19.1	19.9	20.7
74											12.9	13.6	14.4	15.2	16.0	16.8	17.5	18.3	19.1	19.9
75												12.8	13.6	14.4	15.2	16.0	16.7	17.5	18.3	19.1
76													12.8	13.6	14.4	15.2	15.9	16.7	17.5	18.3

Table 3. Target Temperature Split for Outdoor Air Dry-bulb Temperature of 70°F

Return Air Wet-bulb Temperature (F)	Return Air Dry-bulb Temperature (F)																			
	65	**66**	**67**	**68**	**69**	**70**	**71**	**72**	**73**	**74**	**75**	**76**	**77**	**78**	**79**	**80**	**81**	**82**	**83**	**84**
46	24.5	24.8	25.1	25.4	25.7	26.0	26.3	26.6	26.9	27.2										
47	24.5	24.8	25.1	25.4	25.7	26.0	26.3	26.6	26.9	27.2	27.6	27.9								
48	24.5	24.8	25.1	25.4	25.7	26.0	26.3	26.6	26.9	27.2	27.6	27.9	28.2	28.5						
49	24.4	24.8	25.1	25.4	25.7	26.0	26.3	26.6	26.9	27.2	27.6	27.9	28.2	28.5	28.8	29.1				
50	23.6	24.3	25.1	25.4	25.7	26.0	26.3	26.6	26.9	27.2	27.6	27.9	28.2	28.5	28.8	29.1	29.4	29.7		
51	22.8	23.5	24.3	25.1	25.7	26.0	26.3	26.6	26.9	27.2	27.6	27.9	28.2	28.5	28.8	29.1	29.4	29.7	30.0	30.3
52	22.0	22.7	23.5	24.3	25.1	25.9	26.3	26.6	26.9	27.2	27.6	27.9	28.2	28.5	28.8	29.1	29.4	29.7	30.0	30.3
53	21.2	21.9	22.7	23.5	24.3	25.1	25.8	26.6	26.9	27.2	27.6	27.9	28.2	28.5	28.8	29.1	29.4	29.7	30.0	30.3
54	20.4	21.1	21.9	22.7	23.5	24.3	25.0	25.8	26.6	27.2	27.6	27.9	28.2	28.5	28.8	29.1	29.4	29.7	30.0	30.3
55	19.6	20.3	21.1	21.9	22.7	23.5	24.2	25.0	25.8	26.6	27.4	27.9	28.2	28.5	28.8	29.1	29.4	29.7	30.0	30.3
56	18.8	19.5	20.3	21.1	21.9	22.7	23.4	24.2	25.0	25.8	26.6	27.3	28.1	28.5	28.8	29.1	29.4	29.7	30.0	30.3
57	18.0	18.7	19.5	20.3	21.1	21.9	22.6	23.4	24.2	25.0	25.8	26.5	27.3	28.1	28.8	29.1	29.4	29.7	30.0	30.3
58	17.2	17.9	18.7	19.5	20.3	21.1	21.8	22.6	23.4	24.2	25.0	25.7	26.5	27.3	28.1	28.9	29.4	29.7	30.0	30.3
59	16.4	17.1	17.9	18.7	19.5	20.3	21.0	21.8	22.6	23.4	24.2	24.9	25.7	26.5	27.3	28.1	28.8	29.6	30.0	30.3
60	15.6	16.3	17.1	17.9	18.7	19.5	20.2	21.0	21.8	22.6	23.4	24.1	24.9	25.7	26.5	27.3	28.0	28.8	29.6	30.3
61	14.8	15.5	16.3	17.1	17.9	18.7	19.4	20.2	21.0	21.8	22.6	23.3	24.1	24.9	25.7	26.5	27.2	28.0	28.8	29.6
62	14.0	14.7	15.5	16.3	17.1	17.9	18.6	19.4	20.2	21.0	21.8	22.5	23.3	24.1	24.9	25.7	26.4	27.2	28.0	28.8
63	13.2	13.9	14.7	15.5	16.3	17.1	17.8	18.6	19.4	20.2	21.0	21.7	22.5	23.3	24.1	24.9	25.6	26.4	27.2	28.0
64	12.4	13.1	13.9	14.7	15.5	16.3	17.0	17.8	18.6	19.4	20.2	20.9	21.7	22.5	23.3	24.1	24.8	25.6	26.4	27.2
65		12.3	13.1	13.9	14.7	15.5	16.2	17.0	17.8	18.6	19.4	20.1	20.9	21.7	22.5	23.3	24.0	24.8	25.6	26.4
66			12.3	13.1	13.9	14.7	15.4	16.2	17.0	17.8	18.6	19.3	20.1	20.9	21.7	22.5	23.2	24.0	24.8	25.6
67				12.3	13.1	13.9	14.6	15.4	16.2	17.0	17.8	18.5	19.3	20.1	20.9	**21.7**	22.4	23.2	24.0	24.8
68					12.3	13.1	13.8	14.6	15.4	16.2	17.0	17.7	18.5	19.3	20.1	20.9	21.6	22.4	23.2	24.0
69						12.3	13.0	13.8	14.6	15.4	16.2	16.9	17.7	18.5	19.3	20.1	20.8	21.6	22.4	23.2
70							12.2	13.0	13.8	14.6	15.4	16.1	16.9	17.7	18.5	19.3	20.0	20.8	21.6	22.4
71								12.2	13.0	13.8	14.6	15.3	16.1	16.9	17.7	18.5	19.2	20.0	20.8	21.6
72									12.2	13.0	13.8	14.5	15.3	16.1	16.9	17.7	18.4	19.2	20.0	20.8
73										12.2	13.0	13.7	14.5	15.3	16.1	16.9	17.6	18.4	19.2	20.0
74											12.2	12.9	13.7	14.5	15.3	16.1	16.8	17.6	18.4	19.2
75												12.1	12.9	13.7	14.5	15.3	16.0	16.8	17.6	18.4
76													12.1	12.9	13.7	14.5	15.2	16.0	16.8	17.6

Table 4. Target Temperature Split for Outdoor Air Dry-bulb Temperature of 80°F

Return Air Wet-bulb Temperature (F)	Return Air Dry-bulb Temperature (F)																			
	65	**66**	**67**	**68**	**69**	**70**	**71**	**72**	**73**	**74**	**75**	**76**	**77**	**78**	**79**	**80**	**81**	**82**	**83**	**84**
46	23.1	23.4	23.7	24.0	24.3	24.6	24.9	25.2	25.5	25.8										
47	23.1	23.4	23.7	24.0	24.3	24.6	24.9	25.2	25.5	25.8	26.2	26.5								
48	23.1	23.4	23.7	24.0	24.3	24.6	24.9	25.2	25.5	25.8	26.2	26.5	26.8	27.1						
49	23.1	23.4	23.7	24.0	24.3	24.6	24.9	25.2	25.5	25.8	26.2	26.5	26.8	27.1	27.4	27.7				
50	22.9	23.4	23.7	24.0	24.3	24.6	24.9	25.2	25.5	25.8	26.2	26.5	26.8	27.1	27.4	27.7	28.0	28.3		
51	22.1	22.8	23.6	24.0	24.3	24.6	24.9	25.2	25.5	25.8	26.2	26.5	26.8	27.1	27.4	27.7	28.0	28.3	28.6	28.9
52	21.3	22.0	22.8	23.6	24.3	24.6	24.9	25.2	25.5	25.8	26.2	26.5	26.8	27.1	27.4	27.7	28.0	28.3	28.6	28.9
53	20.5	21.2	22.0	22.8	23.6	24.4	24.9	25.2	25.5	25.8	26.2	26.5	26.8	27.1	27.4	27.7	28.0	28.3	28.6	28.9
54	19.7	20.4	21.2	22.0	22.8	23.6	24.3	25.1	25.5	25.8	26.2	26.5	26.8	27.1	27.4	27.7	28.0	28.3	28.6	28.9
55	18.9	19.6	20.4	21.2	22.0	22.8	23.5	24.3	25.1	25.8	26.2	26.5	26.8	27.1	27.4	27.7	28.0	28.3	28.6	28.9
56	18.1	18.8	19.6	20.4	21.2	22.0	22.7	23.5	24.3	25.1	25.9	26.5	26.8	27.1	27.4	27.7	28.0	28.3	28.6	28.9
57	17.3	18.0	18.8	19.6	20.4	21.2	21.9	22.7	23.5	24.3	25.1	25.8	26.6	27.1	27.4	27.7	28.0	28.3	28.6	28.9
58	16.5	17.2	18.0	18.8	19.6	20.4	21.1	21.9	22.7	23.5	24.3	25.0	25.8	26.6	27.4	27.7	28.0	28.3	28.6	28.9
59	15.7	16.4	17.2	18.0	18.8	19.6	20.3	21.1	21.9	22.7	23.5	24.2	25.0	25.8	26.6	27.4	28.0	28.3	28.6	28.9
60	14.9	15.6	16.4	17.2	18.0	18.8	19.5	20.3	21.1	21.9	22.7	23.4	24.2	25.0	25.8	26.6	27.3	28.1	28.6	28.9
61	14.1	14.8	15.6	16.4	17.2	18.0	18.7	19.5	20.3	21.1	21.9	22.6	23.4	24.2	25.0	25.8	26.5	27.3	28.1	28.9
62	13.3	14.0	14.8	15.6	16.4	17.2	17.9	18.7	19.5	20.3	21.1	21.8	22.6	23.4	24.2	25.0	25.7	26.5	27.3	28.1
63	12.5	13.2	14.0	14.8	15.6	16.4	17.1	17.9	18.7	19.5	20.3	21.0	21.8	22.6	23.4	24.2	24.9	25.7	26.5	27.3
64	11.7	12.4	13.2	14.0	14.8	15.6	16.3	17.1	17.9	18.7	19.5	20.2	21.0	21.8	22.6	23.4	24.1	24.9	25.7	26.5
65		11.6	12.4	13.2	14.0	14.8	15.5	16.3	17.1	17.9	18.7	19.4	20.2	21.0	21.8	22.6	23.3	24.1	24.9	25.7
66			11.6	12.4	13.2	14.0	14.7	15.5	16.3	17.1	17.9	18.6	19.4	20.2	21.0	21.8	22.5	23.3	24.1	24.9
67				11.6	12.4	13.2	13.9	14.7	15.5	16.3	17.1	17.8	18.6	19.4	20.2	**21.0**	21.7	22.5	23.3	24.1
68					11.6	12.4	13.1	13.9	14.7	15.5	16.3	17.0	17.8	18.6	19.4	20.2	20.9	21.7	22.5	23.3
69						11.6	12.3	13.1	13.9	14.7	15.5	16.2	17.0	17.8	18.6	19.4	20.1	20.9	21.7	22.5
70							11.5	12.3	13.1	13.9	14.7	15.4	16.2	17.0	17.8	18.6	19.3	20.1	20.9	21.7
71								11.5	12.3	13.1	13.9	14.6	15.4	16.2	17.0	17.8	18.5	19.3	20.1	20.9
72									11.5	12.3	13.1	13.8	14.6	15.4	16.2	17.0	17.7	18.5	19.3	20.1
73										11.5	12.3	13.0	13.8	14.6	15.4	16.2	16.9	17.7	18.5	19.3
74											11.5	12.2	13.0	13.8	14.6	15.4	16.1	16.9	17.7	18.5
75												11.4	12.2	13.0	13.8	14.6	15.3	16.1	16.9	17.7
76													11.4	12.2	13.0	13.8	14.5	15.3	16.1	16.9

Table 5. Target Temperature Split for Outdoor Air Dry-bulb Temperature of 90°F

Return Air Wet-bulb Temperature (F)	Return Air Dry-bulb Temperature (F)																			
	65	**66**	**67**	**68**	**69**	**70**	**71**	**72**	**73**	**74**	**75**	**76**	**77**	**78**	**79**	**80**	**81**	**82**	**83**	**84**
46	21.7	22.0	22.3	22.6	22.9	23.2	23.5	23.8	24.1	24.4										
47	21.7	22.0	22.3	22.6	22.9	23.2	23.5	23.8	24.1	24.4	24.8	25.1								
48	21.7	22.0	22.3	22.6	22.9	23.2	23.5	23.8	24.1	24.4	24.8	25.1	25.4	25.7						
49	21.7	22.0	22.3	22.6	22.9	23.2	23.5	23.8	24.1	24.4	24.8	25.1	25.4	25.7	26.0	26.3				
50	21.7	22.0	22.3	22.6	22.9	23.2	23.5	23.8	24.1	24.4	24.8	25.1	25.4	25.7	26.0	26.3	26.6	26.9		
51	21.4	22.0	22.3	22.6	22.9	23.2	23.5	23.8	24.1	24.4	24.8	25.1	25.4	25.7	26.0	26.3	26.6	26.9	27.2	27.5
52	20.6	21.3	22.1	22.6	22.9	23.2	23.5	23.8	24.1	24.4	24.8	25.1	25.4	25.7	26.0	26.3	26.6	26.9	27.2	27.5
53	19.8	20.5	21.3	22.1	22.9	23.2	23.5	23.8	24.1	24.4	24.8	25.1	25.4	25.7	26.0	26.3	26.6	26.9	27.2	27.5
54	19.0	19.7	20.5	21.3	22.1	22.9	23.5	23.8	24.1	24.4	24.8	25.1	25.4	25.7	26.0	26.3	26.6	26.9	27.2	27.5
55	18.2	18.9	19.7	20.5	21.3	22.1	22.8	23.6	24.1	24.4	24.8	25.1	25.4	25.7	26.0	26.3	26.6	26.9	27.2	27.5
56	17.4	18.1	18.9	19.7	20.5	21.3	22.0	22.8	23.6	24.4	24.8	25.1	25.4	25.7	26.0	26.3	26.6	26.9	27.2	27.5
57	16.6	17.3	18.1	18.9	19.7	20.5	21.2	22.0	22.8	23.6	24.4	25.1	25.4	25.7	26.0	26.3	26.6	26.9	27.2	27.5
58	15.8	16.5	17.3	18.1	18.9	19.7	20.4	21.2	22.0	22.8	23.6	24.3	25.1	25.7	26.0	26.3	26.6	26.9	27.2	27.5
59	15.0	15.7	16.5	17.3	18.1	18.9	19.6	20.4	21.2	22.0	22.8	23.5	24.3	25.1	25.9	26.3	26.6	26.9	27.2	27.5
60	14.2	14.9	15.7	16.5	17.3	18.1	18.8	19.6	20.4	21.2	22.0	22.7	23.5	24.3	25.1	25.9	26.6	26.9	27.2	27.5
61	13.4	14.1	14.9	15.7	16.5	17.3	18.0	18.8	19.6	20.4	21.2	21.9	22.7	23.5	24.3	25.1	25.8	26.6	27.2	27.5
62	12.6	13.3	14.1	14.9	15.7	16.5	17.2	18.0	18.8	19.6	20.4	21.1	21.9	22.7	23.5	24.3	25.0	25.8	26.6	27.4
63	11.8	12.5	13.3	14.1	14.9	15.7	16.4	17.2	18.0	18.8	19.6	20.3	21.1	21.9	22.7	23.5	24.2	25.0	25.8	26.6
64	11.0	11.7	12.5	13.3	14.1	14.9	15.6	16.4	17.2	18.0	18.8	19.5	20.3	21.1	21.9	22.7	23.4	24.2	25.0	25.8
65		10.9	11.7	12.5	13.3	14.1	14.8	15.6	16.4	17.2	18.0	18.7	19.5	20.3	21.1	21.9	22.6	23.4	24.2	25.0
66			10.9	11.7	12.5	13.3	14.0	14.8	15.6	16.4	17.2	17.9	18.7	19.5	20.3	21.1	21.8	22.6	23.4	24.2
67				10.9	11.7	12.5	13.2	14.0	14.8	15.6	16.4	17.1	17.9	18.7	19.5	**20.3**	21.0	21.8	22.6	23.4
68					10.9	11.7	12.4	13.2	14.0	14.8	15.6	16.3	17.1	17.9	18.7	19.5	20.2	21.0	21.8	22.6
69						10.9	11.6	12.4	13.2	14.0	14.8	15.5	16.3	17.1	17.9	18.7	19.4	20.2	21.0	21.8
70							10.8	11.6	12.4	13.2	14.0	14.7	15.5	16.3	17.1	17.9	18.6	19.4	20.2	21.0
71								10.8	11.6	12.4	13.2	13.9	14.7	15.5	16.3	17.1	17.8	18.6	19.4	20.2
72									10.8	11.6	12.4	13.1	13.9	14.7	15.5	16.3	17.0	17.8	18.6	19.4
73										10.8	11.6	12.3	13.1	13.9	14.7	15.5	16.2	17.0	17.8	18.6
74											10.8	11.5	12.3	13.1	13.9	14.7	15.4	16.2	17.0	17.8
75												10.7	11.5	12.3	13.1	13.9	14.6	15.4	16.2	17.0
76													10.7	11.5	12.3	13.1	13.8	14.6	15.4	16.2

Table 6. Target Temperature Split for Outdoor Air Dry-bulb Temperature of 95°F

Return Air Wet-bulb Temperature (F)	Return Air Dry-bulb Temperature (F)																			
	65	**66**	**67**	**68**	**69**	**70**	**71**	**72**	**73**	**74**	**75**	**76**	**77**	**78**	**79**	**80**	**81**	**82**	**83**	**84**
46	21.0	21.3	21.6	21.9	22.2	22.5	22.8	23.1	23.4	23.7										
47	21.0	21.3	21.6	21.9	22.2	22.5	22.8	23.1	23.4	23.7	24.1	24.4								
48	21.0	21.3	21.6	21.9	22.2	22.5	22.8	23.1	23.4	23.7	24.1	24.4	24.7	25.0						
49	21.0	21.3	21.6	21.9	22.2	22.5	22.8	23.1	23.4	23.7	24.1	24.4	24.7	25.0	25.3	25.6				
50	21.0	21.3	21.6	21.9	22.2	22.5	22.8	23.1	23.4	23.7	24.1	24.4	24.7	25.0	25.3	25.6	25.9	26.2		
51	21.0	21.3	21.6	21.9	22.2	22.5	22.8	23.1	23.4	23.7	24.1	24.4	24.7	25.0	25.3	25.6	25.9	26.2	26.5	26.8
52	20.2	21.0	21.6	21.9	22.2	22.5	22.8	23.1	23.4	23.7	24.1	24.4	24.7	25.0	25.3	25.6	25.9	26.2	26.5	26.8
53	19.4	20.2	21.0	21.7	22.2	22.5	22.8	23.1	23.4	23.7	24.1	24.4	24.7	25.0	25.3	25.6	25.9	26.2	26.5	26.8
54	18.6	19.4	20.2	20.9	21.7	22.5	22.8	23.1	23.4	23.7	24.1	24.4	24.7	25.0	25.3	25.6	25.9	26.2	26.5	26.8
55	17.8	18.6	19.4	20.1	20.9	21.7	22.5	23.1	23.4	23.7	24.1	24.4	24.7	25.0	25.3	25.6	25.9	26.2	26.5	26.8
56	17.0	17.8	18.6	19.3	20.1	20.9	21.7	22.5	23.2	23.7	24.1	24.4	24.7	25.0	25.3	25.6	25.9	26.2	26.5	26.8
57	16.2	17.0	17.8	18.5	19.3	20.1	20.9	21.7	22.4	23.2	24.0	24.4	24.7	25.0	25.3	25.6	25.9	26.2	26.5	26.8
58	15.4	16.2	17.0	17.7	18.5	19.3	20.1	20.9	21.6	22.4	23.2	24.0	24.7	25.0	25.3	25.6	25.9	26.2	26.5	26.8
59	14.6	15.4	16.2	16.9	17.7	18.5	19.3	20.1	20.8	21.6	22.4	23.2	24.0	24.7	25.3	25.6	25.9	26.2	26.5	26.8
60	13.8	14.6	15.4	16.1	16.9	17.7	18.5	19.3	20.0	20.8	21.6	22.4	23.2	23.9	24.7	25.5	25.9	26.2	26.5	26.8
61	13.0	13.8	14.6	15.3	16.1	16.9	17.7	18.5	19.2	20.0	20.8	21.6	22.4	23.1	23.9	24.7	25.5	26.2	26.5	26.8
62	12.2	13.0	13.8	14.5	15.3	16.1	16.9	17.7	18.4	19.2	20.0	20.8	21.6	22.3	23.1	23.9	24.7	25.5	26.2	26.8
63	11.4	12.2	13.0	13.7	14.5	15.3	16.1	16.9	17.6	18.4	19.2	20.0	20.8	21.5	22.3	23.1	23.9	24.7	25.4	26.2
64	10.6	11.4	12.2	12.9	13.7	14.5	15.3	16.1	16.8	17.6	18.4	19.2	20.0	20.7	21.5	22.3	23.1	23.9	24.6	25.4
65		10.6	11.4	12.1	12.9	13.7	14.5	15.3	16.0	16.8	17.6	18.4	19.2	19.9	20.7	21.5	22.3	23.1	23.8	24.6
66			10.6	11.3	12.1	12.9	13.7	14.5	15.2	16.0	16.8	17.6	18.4	19.1	19.9	20.7	21.5	22.3	23.0	23.8
67				10.5	11.3	12.1	12.9	13.7	14.4	15.2	16.0	16.8	17.6	18.3	19.1	**19.9**	20.7	21.5	22.2	23.0
68					10.5	11.3	12.1	12.9	13.6	14.4	15.2	16.0	16.8	17.5	18.3	19.1	19.9	20.7	21.4	22.2
69						10.5	11.3	12.1	12.8	13.6	14.4	15.2	16.0	16.7	17.5	18.3	19.1	19.9	20.6	21.4
70							10.5	11.3	12.0	12.8	13.6	14.4	15.2	15.9	16.7	17.5	18.3	19.1	19.8	20.6
71								10.5	11.2	12.0	12.8	13.6	14.4	15.1	15.9	16.7	17.5	18.3	19.0	19.8
72									10.4	11.2	12.0	12.8	13.6	14.3	15.1	15.9	16.7	17.5	18.2	19.0
73										10.4	11.2	12.0	12.8	13.5	14.3	15.1	15.9	16.7	17.4	18.2
74											10.4	11.2	12.0	12.7	13.5	14.3	15.1	15.9	16.6	17.4
75												10.4	11.2	11.9	12.7	13.5	14.3	15.1	15.8	16.6
76													10.4	11.1	11.9	12.7	13.5	14.3	15.0	15.8

Table 7. Target Temperature Split for Outdoor Air Dry-bulb Temperature of 100°F

Return Air Wet-bulb Temperature (F)	Return Air Dry-bulb Temperature (F)																			
	65	**66**	**67**	**68**	**69**	**70**	**71**	**72**	**73**	**74**	**75**	**76**	**77**	**78**	**79**	**80**	**81**	**82**	**83**	**84**
46	20.3	20.6	20.9	21.2	21.5	21.8	22.1	22.4	22.7	23.0										
47	20.3	20.6	20.9	21.2	21.5	21.8	22.1	22.4	22.7	23.0	23.4	23.7								
48	20.3	20.6	20.9	21.2	21.5	21.8	22.1	22.4	22.7	23.0	23.4	23.7	24.0	24.3						
49	20.3	20.6	20.9	21.2	21.5	21.8	22.1	22.4	22.7	23.0	23.4	23.7	24.0	24.3	24.6	24.9				
50	20.3	20.6	20.9	21.2	21.5	21.8	22.1	22.4	22.7	23.0	23.4	23.7	24.0	24.3	24.6	24.9	25.2	25.5		
51	20.3	20.6	20.9	21.2	21.5	21.8	22.1	22.4	22.7	23.0	23.4	23.7	24.0	24.3	24.6	24.9	25.2	25.5	25.8	26.1
52	19.9	20.6	20.9	21.2	21.5	21.8	22.1	22.4	22.7	23.0	23.4	23.7	24.0	24.3	24.6	24.9	25.2	25.5	25.8	26.1
53	19.1	19.8	20.6	21.2	21.5	21.8	22.1	22.4	22.7	23.0	23.4	23.7	24.0	24.3	24.6	24.9	25.2	25.5	25.8	26.1
54	18.3	19.0	19.8	20.6	21.4	21.8	22.1	22.4	22.7	23.0	23.4	23.7	24.0	24.3	24.6	24.9	25.2	25.5	25.8	26.1
55	17.5	18.2	19.0	19.8	20.6	21.4	22.1	22.4	22.7	23.0	23.4	23.7	24.0	24.3	24.6	24.9	25.2	25.5	25.8	26.1
56	16.7	17.4	18.2	19.0	19.8	20.6	21.3	22.1	22.7	23.0	23.4	23.7	24.0	24.3	24.6	24.9	25.2	25.5	25.8	26.1
57	15.9	16.6	17.4	18.2	19.0	19.8	20.5	21.3	22.1	22.9	23.4	23.7	24.0	24.3	24.6	24.9	25.2	25.5	25.8	26.1
58	15.1	15.8	16.6	17.4	18.2	19.0	19.7	20.5	21.3	22.1	22.9	23.6	24.0	24.3	24.6	24.9	25.2	25.5	25.8	26.1
59	14.3	15.0	15.8	16.6	17.4	18.2	18.9	19.7	20.5	21.3	22.1	22.8	23.6	24.3	24.6	24.9	25.2	25.5	25.8	26.1
60	13.5	14.2	15.0	15.8	16.6	17.4	18.1	18.9	19.7	20.5	21.3	22.0	22.8	23.6	24.4	24.9	25.2	25.5	25.8	26.1
61	12.7	13.4	14.2	15.0	15.8	16.6	17.3	18.1	18.9	19.7	20.5	21.2	22.0	22.8	23.6	24.4	25.1	25.5	25.8	26.1
62	11.9	12.6	13.4	14.2	15.0	15.8	16.5	17.3	18.1	18.9	19.7	20.4	21.2	22.0	22.8	23.6	24.3	25.1	25.8	26.1
63	11.1	11.8	12.6	13.4	14.2	15.0	15.7	16.5	17.3	18.1	18.9	19.6	20.4	21.2	22.0	22.8	23.5	24.3	25.1	25.9
64	10.3	11.0	11.8	12.6	13.4	14.2	14.9	15.7	16.5	17.3	18.1	18.8	19.6	20.4	21.2	22.0	22.7	23.5	24.3	25.1
65		10.2	11.0	11.8	12.6	13.4	14.1	14.9	15.7	16.5	17.3	18.0	18.8	19.6	20.4	21.2	21.9	22.7	23.5	24.3
66			10.2	11.0	11.8	12.6	13.3	14.1	14.9	15.7	16.5	17.2	18.0	18.8	19.6	20.4	21.1	21.9	22.7	23.5
67				10.2	11.0	11.8	12.5	13.3	14.1	14.9	15.7	16.4	17.2	18.0	18.8	**19.6**	20.3	21.1	21.9	22.7
68					10.2	11.0	11.7	12.5	13.3	14.1	14.9	15.6	16.4	17.2	18.0	18.8	19.5	20.3	21.1	21.9
69						10.2	10.9	11.7	12.5	13.3	14.1	14.8	15.6	16.4	17.2	18.0	18.7	19.5	20.3	21.1
70							10.1	10.9	11.7	12.5	13.3	14.0	14.8	15.6	16.4	17.2	17.9	18.7	19.5	20.3
71								10.1	10.9	11.7	12.5	13.2	14.0	14.8	15.6	16.4	17.1	17.9	18.7	19.5
72									10.1	10.9	11.7	12.4	13.2	14.0	14.8	15.6	16.3	17.1	17.9	18.7
73										10.1	10.9	11.6	12.4	13.2	14.0	14.8	15.5	16.3	17.1	17.9
74											10.1	10.8	11.6	12.4	13.2	14.0	14.7	15.5	16.3	17.1
75												10.0	10.8	11.6	12.4	13.2	13.9	14.7	15.5	16.3
76													10.0	10.8	11.6	12.4	13.1	13.9	14.7	15.5

Table 8. Target Temperature Split for Outdoor Air Dry-bulb Temperature of 110°F

Return Air Wet-bulb Temperature (F)	Return Air Dry-bulb Temperature (F)																			
	65	**66**	**67**	**68**	**69**	**70**	**71**	**72**	**73**	**74**	**75**	**76**	**77**	**78**	**79**	**80**	**81**	**82**	**83**	**84**
46	18.9	19.2	19.5	19.8	20.1	20.4	20.7	21.0	21.3	21.6										
47	18.9	19.2	19.5	19.8	20.1	20.4	20.7	21.0	21.3	21.6	22.0	22.3								
48	18.9	19.2	19.5	19.8	20.1	20.4	20.7	21.0	21.3	21.6	22.0	22.3	22.6	22.9						
49	18.9	19.2	19.5	19.8	20.1	20.4	20.7	21.0	21.3	21.6	22.0	22.3	22.6	22.9	23.2	23.5				
50	18.9	19.2	19.5	19.8	20.1	20.4	20.7	21.0	21.3	21.6	22.0	22.3	22.6	22.9	23.2	23.5	23.8	24.1		
51	18.9	19.2	19.5	19.8	20.1	20.4	20.7	21.0	21.3	21.6	22.0	22.3	22.6	22.9	23.2	23.5	23.8	24.1	24.4	24.7
52	18.9	19.2	19.5	19.8	20.1	20.4	20.7	21.0	21.3	21.6	22.0	22.3	22.6	22.9	23.2	23.5	23.8	24.1	24.4	24.7
53	18.4	19.1	19.5	19.8	20.1	20.4	20.7	21.0	21.3	21.6	22.0	22.3	22.6	22.9	23.2	23.5	23.8	24.1	24.4	24.7
54	17.6	18.3	19.1	19.8	20.1	20.4	20.7	21.0	21.3	21.6	22.0	22.3	22.6	22.9	23.2	23.5	23.8	24.1	24.4	24.7
55	16.8	17.5	18.3	19.1	19.9	20.4	20.7	21.0	21.3	21.6	22.0	22.3	22.6	22.9	23.2	23.5	23.8	24.1	24.4	24.7
56	16.0	16.7	17.5	18.3	19.1	19.9	20.6	21.0	21.3	21.6	22.0	22.3	22.6	22.9	23.2	23.5	23.8	24.1	24.4	24.7
57	15.2	15.9	16.7	17.5	18.3	19.1	19.8	20.6	21.3	21.6	22.0	22.3	22.6	22.9	23.2	23.5	23.8	24.1	24.4	24.7
58	14.4	15.1	15.9	16.7	17.5	18.3	19.0	19.8	20.6	21.4	22.0	22.3	22.6	22.9	23.2	23.5	23.8	24.1	24.4	24.7
59	13.6	14.3	15.1	15.9	16.7	17.5	18.2	19.0	19.8	20.6	21.4	22.1	22.6	22.9	23.2	23.5	23.8	24.1	24.4	24.7
60	12.8	13.5	14.3	15.1	15.9	16.7	17.4	18.2	19.0	19.8	20.6	21.3	22.1	22.9	23.2	23.5	23.8	24.1	24.4	24.7
61	12.0	12.7	13.5	14.3	15.1	15.9	16.6	17.4	18.2	19.0	19.8	20.5	21.3	22.1	22.9	23.5	23.8	24.1	24.4	24.7
62	11.2	11.9	12.7	13.5	14.3	15.1	15.8	16.6	17.4	18.2	19.0	19.7	20.5	21.3	22.1	22.9	23.6	24.1	24.4	24.7
63	10.4	11.1	11.9	12.7	13.5	14.3	15.0	15.8	16.6	17.4	18.2	18.9	19.7	20.5	21.3	22.1	22.8	23.6	24.4	24.7
64	9.6	10.3	11.1	11.9	12.7	13.5	14.2	15.0	15.8	16.6	17.4	18.1	18.9	19.7	20.5	21.3	22.0	22.8	23.6	24.4
65		9.5	10.3	11.1	11.9	12.7	13.4	14.2	15.0	15.8	16.6	17.3	18.1	18.9	19.7	20.5	21.2	22.0	22.8	23.6
66			9.5	10.3	11.1	11.9	12.6	13.4	14.2	15.0	15.8	16.5	17.3	18.1	18.9	19.7	20.4	21.2	22.0	22.8
67				9.5	10.3	11.1	11.8	12.6	13.4	14.2	15.0	15.7	16.5	17.3	18.1	**18.9**	19.6	20.4	21.2	22.0
68					9.5	10.3	11.0	11.8	12.6	13.4	14.2	14.9	15.7	16.5	17.3	18.1	18.8	19.6	20.4	21.2
69						9.5	10.2	11.0	11.8	12.6	13.4	14.1	14.9	15.7	16.5	17.3	18.0	18.8	19.6	20.4
70							9.4	10.2	11.0	11.8	12.6	13.3	14.1	14.9	15.7	16.5	17.2	18.0	18.8	19.6
71								9.4	10.2	11.0	11.8	12.5	13.3	14.1	14.9	15.7	16.4	17.2	18.0	18.8
72									9.4	10.2	11.0	11.7	12.5	13.3	14.1	14.9	15.6	16.4	17.2	18.0
73										9.4	10.2	10.9	11.7	12.5	13.3	14.1	14.8	15.6	16.4	17.2
74											9.4	10.1	10.9	11.7	12.5	13.3	14.0	14.8	15.6	16.4
75												9.3	10.1	10.9	11.7	12.5	13.2	14.0	14.8	15.6
76													9.3	10.1	10.9	11.7	12.4	13.2	14.0	14.8

Table 9. Target Temperature Split for Outdoor Air Dry-bulb Temperature of 120°F

Return Air Wet-bulb Temperature (F)	Return Air Dry-bulb Temperature (F)																			
	65	**66**	**67**	**68**	**69**	**70**	**71**	**72**	**73**	**74**	**75**	**76**	**77**	**78**	**79**	**80**	**81**	**82**	**83**	**84**
46	17.5	17.8	18.1	18.4	18.7	19.0	19.3	19.6	19.9	20.2										
47	17.5	17.8	18.1	18.4	18.7	19.0	19.3	19.6	19.9	20.2	20.6	20.9								
48	17.5	17.8	18.1	18.4	18.7	19.0	19.3	19.6	19.9	20.2	20.6	20.9	21.2	21.5						
49	17.5	17.8	18.1	18.4	18.7	19.0	19.3	19.6	19.9	20.2	20.6	20.9	21.2	21.5	21.8	22.1				
50	17.5	17.8	18.1	18.4	18.7	19.0	19.3	19.6	19.9	20.2	20.6	20.9	21.2	21.5	21.8	22.1	22.4	22.7		
51	17.5	17.8	18.1	18.4	18.7	19.0	19.3	19.6	19.9	20.2	20.6	20.9	21.2	21.5	21.8	22.1	22.4	22.7	23.0	23.3
52	17.5	17.8	18.1	18.4	18.7	19.0	19.3	19.6	19.9	20.2	20.6	20.9	21.2	21.5	21.8	22.1	22.4	22.7	23.0	23.3
53	17.5	17.8	18.1	18.4	18.7	19.0	19.3	19.6	19.9	20.2	20.6	20.9	21.2	21.5	21.8	22.1	22.4	22.7	23.0	23.3
54	16.9	17.6	18.1	18.4	18.7	19.0	19.3	19.6	19.9	20.2	20.6	20.9	21.2	21.5	21.8	22.1	22.4	22.7	23.0	23.3
55	16.1	16.8	17.6	18.4	18.7	19.0	19.3	19.6	19.9	20.2	20.6	20.9	21.2	21.5	21.8	22.1	22.4	22.7	23.0	23.3
56	15.3	16.0	16.8	17.6	18.4	19.0	19.3	19.6	19.9	20.2	20.6	20.9	21.2	21.5	21.8	22.1	22.4	22.7	23.0	23.3
57	14.5	15.2	16.0	16.8	17.6	18.4	19.1	19.6	19.9	20.2	20.6	20.9	21.2	21.5	21.8	22.1	22.4	22.7	23.0	23.3
58	13.7	14.4	15.2	16.0	16.8	17.6	18.3	19.1	19.9	20.2	20.6	20.9	21.2	21.5	21.8	22.1	22.4	22.7	23.0	23.3
59	12.9	13.6	14.4	15.2	16.0	16.8	17.5	18.3	19.1	19.9	20.6	20.9	21.2	21.5	21.8	22.1	22.4	22.7	23.0	23.3
60	12.1	12.8	13.6	14.4	15.2	16.0	16.7	17.5	18.3	19.1	19.9	20.6	21.2	21.5	21.8	22.1	22.4	22.7	23.0	23.3
61	11.3	12.0	12.8	13.6	14.4	15.2	15.9	16.7	17.5	18.3	19.1	19.8	20.6	21.4	21.8	22.1	22.4	22.7	23.0	23.3
62	10.5	11.2	12.0	12.8	13.6	14.4	15.1	15.9	16.7	17.5	18.3	19.0	19.8	20.6	21.4	22.1	22.4	22.7	23.0	23.3
63	9.7	10.4	11.2	12.0	12.8	13.6	14.3	15.1	15.9	16.7	17.5	18.2	19.0	19.8	20.6	21.4	22.1	22.7	23.0	23.3
64	8.9	9.6	10.4	11.2	12.0	12.8	13.5	14.3	15.1	15.9	16.7	17.4	18.2	19.0	19.8	20.6	21.3	22.1	22.9	23.3
65		8.8	9.6	10.4	11.2	12.0	12.7	13.5	14.3	15.1	15.9	16.6	17.4	18.2	19.0	19.8	20.5	21.3	22.1	22.9
66			8.8	9.6	10.4	11.2	11.9	12.7	13.5	14.3	15.1	15.8	16.6	17.4	18.2	19.0	19.7	20.5	21.3	22.1
67				8.8	9.6	10.4	11.1	11.9	12.7	13.5	14.3	15.0	15.8	16.6	17.4	**18.2**	18.9	19.7	20.5	21.3
68					8.8	9.6	10.3	11.1	11.9	12.7	13.5	14.2	15.0	15.8	16.6	17.4	18.1	18.9	19.7	20.5
69						8.8	9.5	10.3	11.1	11.9	12.7	13.4	14.2	15.0	15.8	16.6	17.3	18.1	18.9	19.7
70							8.7	9.5	10.3	11.1	11.9	12.6	13.4	14.2	15.0	15.8	16.5	17.3	18.1	18.9
71								8.7	9.5	10.3	11.1	11.8	12.6	13.4	14.2	15.0	15.7	16.5	17.3	18.1
72									8.7	9.5	10.3	11.0	11.8	12.6	13.4	14.2	14.9	15.7	16.5	17.3
73										8.7	9.5	10.2	11.0	11.8	12.6	13.4	14.1	14.9	15.7	16.5
74											8.7	9.4	10.2	11.0	11.8	12.6	13.3	14.1	14.9	15.7
75												8.6	9.4	10.2	11.0	11.8	12.5	13.3	14.1	14.9
76													8.6	9.4	10.2	11.0	11.7	12.5	13.3	14.1

Table 10. Target Superheat for Return Air Dry-bulb Temperature of 84°F

Return Air Wet-bulb Temperature (F)	Outdoor Air Temperature (F)												
	55	**60**	**65**	**70**	**75**	**80**	**85**	**90**	**95**	**100**	**105**	**110**	**115**
46													
47													
48													
49													
50													
51	17.2	16.0	14.7	13.5	12.2	11.0	9.7	8.5	7.2	6.0	4.7	3.5	2.2
52	17.2	16.0	14.7	13.5	12.2	11.0	9.7	8.5	7.2	6.0	4.7	3.5	2.2
53	17.2	16.0	14.7	13.5	12.2	11.0	9.7	8.5	7.2	6.0	4.7	3.5	2.2
54	17.2	16.0	14.7	13.5	12.2	11.0	9.7	8.5	7.2	6.0	4.7	3.5	2.2
55	17.2	16.0	14.7	13.5	12.2	11.0	9.7	8.5	7.2	6.0	4.7	3.5	2.2
56	17.2	16.0	14.7	13.5	12.2	11.0	9.7	8.5	7.2	6.0	4.7	3.5	2.2
57	17.2	16.0	14.7	13.5	12.2	11.0	9.7	8.5	7.2	6.0	4.7	3.5	2.2
58	17.2	16.0	14.7	13.5	12.2	11.0	9.7	8.5	7.2	6.0	4.7	3.5	2.2
59	17.2	16.0	14.7	13.5	12.2	11.0	9.7	8.5	7.2	6.0	4.7	3.5	2.2
60	17.2	16.0	14.7	13.5	12.2	11.0	9.7	8.5	7.2	6.0	4.7	3.5	2.2
61	17.6	16.0	14.7	13.5	12.2	11.0	9.7	8.5	7.2	6.0	4.7	3.5	2.2
62	19.5	17.6	15.8	13.9	12.2	11.0	9.7	8.5	7.2	6.0	4.7	3.5	2.2
63	21.4	19.4	17.5	15.6	13.7	11.8	9.8	8.5	7.2	6.0	4.7	3.5	2.2
64	23.2	21.3	19.3	17.3	15.4	13.4	11.4	9.5	7.5	6.0	4.7	3.5	2.2
65	25.1	23.1	21.1	19.1	17.0	15.0	13.0	11.0	9.0	7.0	5.0	3.5	2.2
66	26.9	24.9	22.8	20.8	18.7	16.7	14.6	12.6	10.5	8.4	6.4	4.3	2.3
67	28.8	26.7	24.6	22.5	20.4	18.3	16.2	14.1	**12.0**	9.9	7.8	5.7	3.6
68	30.7	28.5	26.4	24.2	22.1	19.9	17.8	15.6	13.5	11.4	9.2	7.1	4.9
69	32.5	30.3	28.1	26.0	23.8	21.6	19.4	17.2	15.0	12.8	10.6	8.4	6.2
70	34.4	32.1	29.9	27.7	25.4	23.2	21.0	18.7	16.5	14.3	12.0	9.8	7.6
71	36.2	34.0	31.7	29.4	27.1	24.8	22.6	20.3	18.0	15.7	13.4	11.2	8.9
72	38.1	35.8	33.5	31.1	28.8	26.5	24.2	21.8	19.5	17.2	14.9	12.5	10.2
73	40.0	37.6	35.2	32.9	30.5	28.1	25.7	23.4	21.0	18.6	16.3	13.9	11.5
74	41.8	39.4	37.0	34.6	32.2	29.7	27.3	24.9	22.5	20.1	17.7	15.3	12.8
75	43.7	41.2	38.8	36.3	33.8	31.4	28.9	26.5	24.0	21.5	19.1	16.6	14.2
76	45.5	43.0	40.5	38.0	35.5	33.0	30.5	28.0	25.5	23.0	20.5	18.0	15.5

Table 11. Target Superheat for Return Air Dry-bulb Temperature of 82°F

Return Air Wet-bulb Temperature (F)	Outdoor Air Temperature (F)													
		55	**60**	**65**	**70**	**75**	**80**	**85**	**90**	**95**	**100**	**105**	**110**	**115**
46														
47														
48														
49														
50		13.6	12.4	11.1	9.9	8.6	7.4	6.1	4.9	3.6	2.4	1.1	0.0	0.0
51		13.6	12.4	11.1	9.9	8.6	7.4	6.1	4.9	3.6	2.4	1.1	0.0	0.0
52		13.6	12.4	11.1	9.9	8.6	7.4	6.1	4.9	3.6	2.4	1.1	0.0	0.0
53		13.6	12.4	11.1	9.9	8.6	7.4	6.1	4.9	3.6	2.4	1.1	0.0	0.0
54		13.6	12.4	11.1	9.9	8.6	7.4	6.1	4.9	3.6	2.4	1.1	0.0	0.0
55		13.6	12.4	11.1	9.9	8.6	7.4	6.1	4.9	3.6	2.4	1.1	0.0	0.0
56		13.6	12.4	11.1	9.9	8.6	7.4	6.1	4.9	3.6	2.4	1.1	0.0	0.0
57		13.6	12.4	11.1	9.9	8.6	7.4	6.1	4.9	3.6	2.4	1.1	0.0	0.0
58		13.6	12.4	11.1	9.9	8.6	7.4	6.1	4.9	3.6	2.4	1.1	0.0	0.0
59		13.9	12.4	11.1	9.9	8.6	7.4	6.1	4.9	3.6	2.4	1.1	0.0	0.0
60		15.8	14.0	12.2	10.4	8.6	7.4	6.1	4.9	3.6	2.4	1.1	0.0	0.0
61		17.6	15.8	14.0	12.2	10.3	8.5	6.7	4.9	3.6	2.4	1.1	0.0	0.0
62		19.5	17.6	15.8	13.9	12.0	10.1	8.3	6.4	4.5	2.6	1.1	0.0	0.0
63		21.4	19.4	17.5	15.6	13.7	11.8	9.8	7.9	6.0	4.1	2.2	0.2	0.0
64		23.2	21.3	19.3	17.3	15.4	13.4	11.4	9.5	7.5	5.5	3.6	1.6	0.0
65		25.1	23.1	21.1	19.1	17.0	15.0	13.0	11.0	9.0	7.0	5.0	3.0	1.0
66		26.9	24.9	22.8	20.8	18.7	16.7	14.6	12.6	10.5	8.4	6.4	4.3	2.3
67		28.8	26.7	24.6	22.5	20.4	18.3	16.2	14.1	**12.0**	9.9	7.8	5.7	3.6
68		30.7	28.5	26.4	24.2	22.1	19.9	17.8	15.6	13.5	11.4	9.2	7.1	4.9
69		32.5	30.3	28.1	26.0	23.8	21.6	19.4	17.2	15.0	12.8	10.6	8.4	6.2
70		34.4	32.1	29.9	27.7	25.4	23.2	21.0	18.7	16.5	14.3	12.0	9.8	7.6
71		36.2	34.0	31.7	29.4	27.1	24.8	22.6	20.3	18.0	15.7	13.4	11.2	8.9
72		38.1	35.8	33.5	31.1	28.8	26.5	24.2	21.8	19.5	17.2	14.9	12.5	10.2
73		40.0	37.6	35.2	32.9	30.5	28.1	25.7	23.4	21.0	18.6	16.3	13.9	11.5
74		41.8	39.4	37.0	34.6	32.2	29.7	27.3	24.9	22.5	20.1	17.7	15.3	12.8
75		43.7	41.2	38.8	36.3	33.8	31.4	28.9	26.5	24.0	21.5	19.1	16.6	14.2
76		45.5	43.0	40.5	38.0	35.5	33.0	30.5	28.0	25.5	23.0	20.5	18.0	15.5

Table 12. Target Superheat for Return Air Dry-bulb Temperature of 80°F

Return Air Wet-bulb Temperature (F)	Outdoor Air Temperature (F)													
		55	**60**	**65**	**70**	**75**	**80**	**85**	**90**	**95**	**100**	**105**	**110**	**115**
46														
47														
48														
49		10.0	8.8	7.5	6.3	5.0	3.8	2.5	1.3	0.0	0.0	0.0	0.0	0.0
50		10.0	8.8	7.5	6.3	5.0	3.8	2.5	1.3	0.0	0.0	0.0	0.0	0.0
51		10.0	8.8	7.5	6.3	5.0	3.8	2.5	1.3	0.0	0.0	0.0	0.0	0.0
52		10.0	8.8	7.5	6.3	5.0	3.8	2.5	1.3	0.0	0.0	0.0	0.0	0.0
53		10.0	8.8	7.5	6.3	5.0	3.8	2.5	1.3	0.0	0.0	0.0	0.0	0.0
54		10.0	8.8	7.5	6.3	5.0	3.8	2.5	1.3	0.0	0.0	0.0	0.0	0.0
55		10.0	8.8	7.5	6.3	5.0	3.8	2.5	1.3	0.0	0.0	0.0	0.0	0.0
56		10.0	8.8	7.5	6.3	5.0	3.8	2.5	1.3	0.0	0.0	0.0	0.0	0.0
57		10.2	8.8	7.5	6.3	5.0	3.8	2.5	1.3	0.0	0.0	0.0	0.0	0.0
58		12.1	10.4	8.7	7.0	5.3	3.8	2.5	1.3	0.0	0.0	0.0	0.0	0.0
59		13.9	12.2	10.4	8.7	7.0	5.2	3.5	1.7	0.0	0.0	0.0	0.0	0.0
60		15.8	14.0	12.2	10.4	8.6	6.9	5.1	3.3	1.5	0.0	0.0	0.0	0.0
61		17.6	15.8	14.0	12.2	10.3	8.5	6.7	4.8	3.0	1.2	0.0	0.0	0.0
62		19.5	17.6	15.8	13.9	12.0	10.1	8.3	6.4	4.5	2.6	0.8	0.0	0.0
63		21.4	19.4	17.5	15.6	13.7	11.8	9.8	7.9	6.0	4.1	2.2	0.2	0.0
64		23.2	21.3	19.3	17.3	15.4	13.4	11.4	9.5	7.5	5.5	3.6	1.6	0.0
65		25.1	23.1	21.1	19.1	17.0	15.0	13.0	11.0	9.0	7.0	5.0	3.0	1.0
66		26.9	24.9	22.8	20.8	18.7	16.7	14.6	12.6	10.5	8.4	6.4	4.3	2.3
67		28.8	26.7	24.6	22.5	20.4	18.3	16.2	14.1	**12.0**	9.9	7.8	5.7	3.6
68		30.7	28.5	26.4	24.2	22.1	19.9	17.8	15.6	13.5	11.4	9.2	7.1	4.9
69		32.5	30.3	28.1	26.0	23.8	21.6	19.4	17.2	15.0	12.8	10.6	8.4	6.2
70		34.4	32.1	29.9	27.7	25.4	23.2	21.0	18.7	16.5	14.3	12.0	9.8	7.6
71		36.2	34.0	31.7	29.4	27.1	24.8	22.6	20.3	18.0	15.7	13.4	11.2	8.9
72		38.1	35.8	33.5	31.1	28.8	26.5	24.2	21.8	19.5	17.2	14.9	12.5	10.2
73		40.0	37.6	35.2	32.9	30.5	28.1	25.7	23.4	21.0	18.6	16.3	13.9	11.5
74		41.8	39.4	37.0	34.6	32.2	29.7	27.3	24.9	22.5	20.1	17.7	15.3	12.8
75		43.7	41.2	38.8	36.3	33.8	31.4	28.9	26.5	24.0	21.5	19.1	16.6	14.2
76		45.5	43.0	40.5	38.0	35.5	33.0	30.5	28.0	25.5	23.0	20.5	18.0	15.5

Table 13. Target Superheat for Return Air Dry-bulb Temperature of 78°F

Return Air Wet-bulb Temperature (F)	Outdoor Air Temperature (F)													
		55	**60**	**65**	**70**	**75**	**80**	**85**	**90**	**95**	**100**	**105**	**110**	**115**
46														
47														
48	6.4	5.2	3.9	2.7	1.4	0.2	0.0	0.0	0.0	0.0	0.0	0.0	0.0	0.0
49	6.4	5.2	3.9	2.7	1.4	0.2	0.0	0.0	0.0	0.0	0.0	0.0	0.0	0.0
50	6.4	5.2	3.9	2.7	1.4	0.2	0.0	0.0	0.0	0.0	0.0	0.0	0.0	0.0
51	6.4	5.2	3.9	2.7	1.4	0.2	0.0	0.0	0.0	0.0	0.0	0.0	0.0	0.0
52	6.4	5.2	3.9	2.7	1.4	0.2	0.0	0.0	0.0	0.0	0.0	0.0	0.0	0.0
53	6.4	5.2	3.9	2.7	1.4	0.2	0.0	0.0	0.0	0.0	0.0	0.0	0.0	0.0
54	6.4	5.2	3.9	2.7	1.4	0.2	0.0	0.0	0.0	0.0	0.0	0.0	0.0	0.0
55	6.5	5.2	3.9	2.7	1.4	0.2	0.0	0.0	0.0	0.0	0.0	0.0	0.0	0.0
56	8.3	6.7	5.1	3.5	1.9	0.3	0.0	0.0	0.0	0.0	0.0	0.0	0.0	0.0
57	10.2	8.6	6.9	5.3	3.6	2.0	0.3	0.0	0.0	0.0	0.0	0.0	0.0	0.0
58	12.1	10.4	8.7	7.0	5.3	3.6	1.9	0.2	0.0	0.0	0.0	0.0	0.0	0.0
59	13.9	12.2	10.4	8.7	7.0	5.2	3.5	1.7	0.0	0.0	0.0	0.0	0.0	0.0
60	15.8	14.0	12.2	10.4	8.6	6.9	5.1	3.3	1.5	0.0	0.0	0.0	0.0	0.0
61	17.6	15.8	14.0	12.2	10.3	8.5	6.7	4.8	3.0	1.2	0.0	0.0	0.0	0.0
62	19.5	17.6	15.8	13.9	12.0	10.1	8.3	6.4	4.5	2.6	0.8	0.0	0.0	0.0
63	21.4	19.4	17.5	15.6	13.7	11.8	9.8	7.9	6.0	4.1	2.2	0.2	0.0	0.0
64	23.2	21.3	19.3	17.3	15.4	13.4	11.4	9.5	7.5	5.5	3.6	1.6	0.0	0.0
65	25.1	23.1	21.1	19.1	17.0	15.0	13.0	11.0	9.0	7.0	5.0	3.0	1.0	0.0
66	26.9	24.9	22.8	20.8	18.7	16.7	14.6	12.6	10.5	8.4	6.4	4.3	2.3	0.0
67	28.8	26.7	24.6	22.5	20.4	18.3	16.2	14.1	**12.0**	9.9	7.8	5.7	3.6	1.5
68	30.7	28.5	26.4	24.2	22.1	19.9	17.8	15.6	13.5	11.4	9.2	7.1	4.9	2.8
69	32.5	30.3	28.1	26.0	23.8	21.6	19.4	17.2	15.0	12.8	10.6	8.4	6.2	4.1
70	34.4	32.1	29.9	27.7	25.4	23.2	21.0	18.7	16.5	14.3	12.0	9.8	7.6	5.4
71	36.2	34.0	31.7	29.4	27.1	24.8	22.6	20.3	18.0	15.7	13.4	11.2	8.9	6.7
72	38.1	35.8	33.5	31.1	28.8	26.5	24.2	21.8	19.5	17.2	14.9	12.5	10.2	7.9
73	40.0	37.6	35.2	32.9	30.5	28.1	25.7	23.4	21.0	18.6	16.3	13.9	11.5	9.2
74	41.8	39.4	37.0	34.6	32.2	29.7	27.3	24.9	22.5	20.1	17.7	15.3	12.8	10.4
75	43.7	41.2	38.8	36.3	33.8	31.4	28.9	26.5	24.0	21.5	19.1	16.6	14.2	11.7
76	45.5	43.0	40.5	38.0	35.5	33.0	30.5	28.0	25.5	23.0	20.5	18.0	15.5	13.0
77	47.4	44.9	42.3	39.8	37.2	34.7	32.1	29.6	27.0	24.5	21.9	19.4	16.8	14.3
78	49.3	46.7	44.1	41.5	38.9	36.3	33.7	31.1	28.5	25.9	23.3	20.7	18.1	15.6

Table 14. Target Superheat for Return Air Dry-bulb Temperature of 76°F

Return Air Wet-bulb Temperature (F)	Outdoor Air Temperature (F)													
		55	**60**	**65**	**70**	**75**	**80**	**85**	**90**	**95**	**100**	**105**	**110**	**115**
46														
47	2.8	1.6	0.3	0.0	0.0	0.0	0.0	0.0	0.0	0.0	0.0	0.0	0.0	0.0
48	2.8	1.6	0.3	0.0	0.0	0.0	0.0	0.0	0.0	0.0	0.0	0.0	0.0	0.0
49	2.8	1.6	0.3	0.0	0.0	0.0	0.0	0.0	0.0	0.0	0.0	0.0	0.0	0.0
50	2.8	1.6	0.3	0.0	0.0	0.0	0.0	0.0	0.0	0.0	0.0	0.0	0.0	0.0
51	2.8	1.6	0.3	0.0	0.0	0.0	0.0	0.0	0.0	0.0	0.0	0.0	0.0	0.0
52	2.8	1.6	0.3	0.0	0.0	0.0	0.0	0.0	0.0	0.0	0.0	0.0	0.0	0.0
53	2.8	1.6	0.3	0.0	0.0	0.0	0.0	0.0	0.0	0.0	0.0	0.0	0.0	0.0
54	4.6	3.1	1.6	0.1	0.0	0.0	0.0	0.0	0.0	0.0	0.0	0.0	0.0	0.0
55	6.5	4.9	3.4	1.8	0.2	0.0	0.0	0.0	0.0	0.0	0.0	0.0	0.0	0.0
56	8.3	6.7	5.1	3.5	1.9	0.3	0.0	0.0	0.0	0.0	0.0	0.0	0.0	0.0
57	10.2	8.6	6.9	5.3	3.6	2.0	0.3	0.0	0.0	0.0	0.0	0.0	0.0	0.0
58	12.1	10.4	8.7	7.0	5.3	3.6	1.9	0.2	0.0	0.0	0.0	0.0	0.0	0.0
59	13.9	12.2	10.4	8.7	7.0	5.2	3.5	1.7	0.0	0.0	0.0	0.0	0.0	0.0
60	15.8	14.0	12.2	10.4	8.6	6.9	5.1	3.3	1.5	0.0	0.0	0.0	0.0	0.0
61	17.6	15.8	14.0	12.2	10.3	8.5	6.7	4.8	3.0	1.2	0.0	0.0	0.0	0.0
62	19.5	17.6	15.8	13.9	12.0	10.1	8.3	6.4	4.5	2.6	0.8	0.0	0.0	0.0
63	21.4	19.4	17.5	15.6	13.7	11.8	9.8	7.9	6.0	4.1	2.2	0.2	0.0	0.0
64	23.2	21.3	19.3	17.3	15.4	13.4	11.4	9.5	7.5	5.5	3.6	1.6	0.0	0.0
65	25.1	23.1	21.1	19.1	17.0	15.0	13.0	11.0	9.0	7.0	5.0	3.0	1.0	0.0
66	26.9	24.9	22.8	20.8	18.7	16.7	14.6	12.6	10.5	8.4	6.4	4.3	2.3	0.0
67	28.8	26.7	24.6	22.5	20.4	18.3	16.2	14.1	**12.0**	9.9	7.8	5.7	3.6	1.5
68	30.7	28.5	26.4	24.2	22.1	19.9	17.8	15.6	13.5	11.4	9.2	7.1	4.9	2.8
69	32.5	30.3	28.1	26.0	23.8	21.6	19.4	17.2	15.0	12.8	10.6	8.4	6.2	4.0
70	34.4	32.1	29.9	27.7	25.4	23.2	21.0	18.7	16.5	14.3	12.0	9.8	7.6	5.3
71	36.2	34.0	31.7	29.4	27.1	24.8	22.6	20.3	18.0	15.7	13.4	11.2	8.9	6.6
72	38.1	35.8	33.5	31.1	28.8	26.5	24.2	21.8	19.5	17.2	14.9	12.5	10.2	7.9
73	40.0	37.6	35.2	32.9	30.5	28.1	25.7	23.4	21.0	18.6	16.3	13.9	11.5	9.2
74	41.8	39.4	37.0	34.6	32.2	29.7	27.3	24.9	22.5	20.1	17.7	15.3	12.8	10.4
75	43.7	41.2	38.8	36.3	33.8	31.4	28.9	26.5	24.0	21.5	19.1	16.6	14.2	11.7
76														
77														
78														

Table 15. Target Superheat for Return Air Dry-bulb Temperature of 74°F or less

Return Air Wet-bulb Temperature (F)	Outdoor Air Temperature (F)												
	55	**60**	**65**	**70**	**75**	**80**	**85**	**90**	**95**	**100**	**105**	**110**	**115**
46	0.0	0.0	0.0	0.0	0.0	0.0	0.0	0.0	0.0	0.0	0.0	0.0	0.0
47	0.0	0.0	0.0	0.0	0.0	0.0	0.0	0.0	0.0	0.0	0.0	0.0	0.0
48	0.0	0.0	0.0	0.0	0.0	0.0	0.0	0.0	0.0	0.0	0.0	0.0	0.0
49	0.0	0.0	0.0	0.0	0.0	0.0	0.0	0.0	0.0	0.0	0.0	0.0	0.0
50	0.0	0.0	0.0	0.0	0.0	0.0	0.0	0.0	0.0	0.0	0.0	0.0	0.0
51	0.0	0.0	0.0	0.0	0.0	0.0	0.0	0.0	0.0	0.0	0.0	0.0	0.0
52	0.9	0.0	0.0	0.0	0.0	0.0	0.0	0.0	0.0	0.0	0.0	0.0	0.0
53	2.8	1.3	0.0	0.0	0.0	0.0	0.0	0.0	0.0	0.0	0.0	0.0	0.0
54	4.6	3.1	1.6	0.1	0.0	0.0	0.0	0.0	0.0	0.0	0.0	0.0	0.0
55	6.5	4.9	3.4	1.8	0.2	0.0	0.0	0.0	0.0	0.0	0.0	0.0	0.0
56	8.3	6.7	5.1	3.5	1.9	0.3	0.0	0.0	0.0	0.0	0.0	0.0	0.0
57	10.2	8.6	6.9	5.3	3.6	2.0	0.3	0.0	0.0	0.0	0.0	0.0	0.0
58	12.1	10.4	8.7	7.0	5.3	3.6	1.9	0.2	0.0	0.0	0.0	0.0	0.0
59	13.9	12.2	10.4	8.7	7.0	5.2	3.5	1.7	0.0	0.0	0.0	0.0	0.0
60	15.8	14.0	12.2	10.4	8.6	6.9	5.1	3.3	1.5	0.0	0.0	0.0	0.0
61	17.6	15.8	14.0	12.2	10.3	8.5	6.7	4.8	3.0	1.2	0.0	0.0	0.0
62	19.5	17.6	15.8	13.9	12.0	10.1	8.3	6.4	4.5	2.6	0.8	0.0	0.0
63	21.4	19.4	17.5	15.6	13.7	11.8	9.8	7.9	6.0	4.1	2.2	0.2	0.0
64	23.2	21.3	19.3	17.3	15.4	13.4	11.4	9.5	7.5	5.5	3.6	1.6	0.0
65	25.1	23.1	21.1	19.1	17.0	15.0	13.0	11.0	9.0	7.0	5.0	3.0	1.0
66	26.9	24.9	22.8	20.8	18.7	16.7	14.6	12.6	10.5	8.4	6.4	4.3	2.3
67	28.8	26.7	24.6	22.5	20.4	18.3	16.2	14.1	**12.0**	9.9	7.8	5.7	3.6
68	30.7	28.5	26.4	24.2	22.1	19.9	17.8	15.6	13.5	11.4	9.2	7.1	4.9
69	32.5	30.3	28.1	26.0	23.8	21.6	19.4	17.2	15.0	12.8	10.6	8.4	6.2
70	34.4	32.1	29.9	27.7	25.4	23.2	21.0	18.7	16.5	14.3	12.0	9.8	7.6
71	36.2	34.0	31.7	29.4	27.1	24.8	22.6	20.3	18.0	15.7	13.4	11.2	8.9
72	38.1	35.8	33.5	31.1	28.8	26.5	24.2	21.8	19.5	17.2	14.9	12.5	10.2
73	40.0	37.6	35.2	32.9	30.5	28.1	25.7	23.4	21.0	18.6	16.3	13.9	11.5
74													
75													
76													
77													
78													

5. Glosssary

Parameter	Description	English Units
ITD	Indoor air Temperature Difference, corresponds to gross capacity (does not include fan heat)	F
Non-TxV	Non-thermal expansion valve or fixed metering device. Sometimes referred to as orifice metering device.	
OAT	Outdoor Air dry-bulb Temperature (air entering condenser)	F
RDB	Return (indoor) air Dry-bulb Temperature	F
RWB	Return (indoor) air Wet-bulb Temperature (entering evaporator)	F
S.C.	Net sensible cooling capacity (manufacturer data)	kBtuh
SC	Refrigerant Subcooling (condenser exit)	F
SDB	Supply air Dry-bulb Temperature (downstream of fan, includes fan heat)	F
SH	Refrigerant Superheat (compressor suction)	F
TS	Temperature Split, dry-bulb temperature difference from return plenum to supply plenum (RDB-SDB), includes the effect of fan heat $TS \approx ITD - 1.1°F$	F
TxV	Thermal expansion valve (variable metering device)	
80/67/95	Test (or simulation) condition designation – example RDB/RWB/OAT	F

6. References

6.1. Previous Investigations

6.1.1 Temple, K. 2004. A Performance Based Method to Determine Refrigerant Charge Level for Commissioning Unitary AC and HP Systems. In Proceedings of the ACEEE 2004 Summer Study on Energy Efficiency in Buildings, 1:306-317. Washington, D.C.: American Council for an Energy-Efficient Economy. [Temple 2004]

6.1.2 Temple, K. and Rossi, T. 2006. Enhanced Refrigeration Diagnostics for an Improved Air Conditioning Tune-up Program. In Proceedings of the ACEEE 2006 Summer Study on Energy Efficiency in Buildings. Washington, D.C.: American Council for an Energy-Efficient Economy.

6.1.3 Temple, K. 2008a. Expanded Test Protocols for Low Ambient Testing of Unitary AC Systems. BERG Project Final Report. Grant 54921 A/06-09B. September 2008 (revision date February 2, 2009). [BERG report, Temple 2008a]

6.1.4 Temple, K. 2008b. Proposed Changes to the 2005 Residential ACM Manual – Appendix RD, deliverable for BERG Project, Grant 54921 A/06-09B. September 2008 (revision date February 2, 2009). [Temple 2008b]

6.1.5 Temple, K. 2009. Indoor Cooling Airflow Evaluation Using Airside Temperature Difference, ASHRAE Seminar Presentation, January 28, 2009. [ASHRAE presentation]

6.2. Current Work Authorization (RWA06 Temple)

6.2.1 Temple, K, 2011. Efficiency and Subcooling Variation with Refrigerant Charge for Unitary Air Conditioning Systems with TxV Expansion Device, Subtask 2.1B (Work Authorization # 6, Contract #400-09-001, Covering Tasks 3 Subtask 2), June 9, 2011

6.3. Other Investigations

6.3.1 Minsung Kim, Seok Ho Yoon, W. Vance Payne, and Piotr A. Domanski, Cooling Mode Fault Detection and Diagnosis Method for a Residential Heat Pump, NIST Special Publication 1087, October 2008. [NIST 2008]

6.3.2 Haorong Li and Jim Braun, D5.4b – Final Report Describing the Development of Refrigeration Cycle, Temperature-Only Refrigeration Cycle Diagnostics (Subtasks 5.4.1 and 5.4.6), California Energy Commission Contract # 500-03-030 (PIER), June 28, 2005.

6.3.3 Haorong Li and Jim Braun, Virtual Refrigerant Charge Sensor. In Proceedings of the ACEEE 2008 Summer Study on Energy Efficiency in Buildings. Washington, D.C.: American Council for an Energy-Efficient Economy.

6.4. Product Data

6.4.1 York, Technical Guide, Affinity Split-System Heat Pumps, Models: YZB024 thru 060, 036-21557-001 Rev. D (0404), 2004.